LAB

Electronic Services - Hayward, Ca
M8411X

ifr
INC

MP MASTER
MA30400

Precision Simulators

ifr INC

FM/AM 1000S

Communications Service Monitor

DATA PACKAGE

Schematics - Printed Circuit Boards

10200 York Street / Wichita, Kansas 67215 U.S.A. / 316/522-4981 / TWX 910-741-6952

PUBLISHED BY
IFR, INC.
Wichita, Kansas

Copyright 1981 by IFR, Inc.

All rights reserved. Printed in the United States of America. No part of this publication may be reproduced, stored in a retrieval system or transmitted in any form or by any means, electronic, mechanical, photocopying, recording or otherwise, without the prior permission of the publisher.

Manual Part Number: 1007-5000-100

NOTE

All schematics and print circuit boards apply to FM/AM-1000S regardless of indicated serialization or model number designation.

TABLE OF CONTENTS

Item	Figure No.
Inter Connect	1
Regulator and Power Supply Schematic	2
Regulator and Power Supply Board	3
Duty Cycle Regulator and Battery Charger Schematic	4
Static Discharge Protector	5
1200 MHz Filter and Receive/Generate Switch	6
1200 MHz Amplifier	7
1200 MHz Amplifier PC Board Assy	8
Second Mixer - Diode Switch Schematic	9
1080 MHz Multiplier Amplifier	10
1080 MHz Multiplier Amplifier PC Board Assy	11
108 MHz Filter Schematic	12
79-80 MHz Loop Schematic	13
100 MHz Multiplier and 108 MHz Mixer	14
100 MHz Multiplier and 108 MHz Mixer PC Board Assy	15
100 MHz Filter Schematic	16
100 MHz Filter PC Board Assy	17
Hi-Freq Multi/Mixer Schematic	18
Het Amp ÷ 2 Prescaler	19
Het Amp ÷ 2 Prescaler PC Assy	20
High Freq Phase Lock CKT	21
High Frequency Phase Lock PC Board Assy	22
VCO Tuner	23
VCO Tuner PC Board Assy	24
Clock Divider	25
Clock Divider PC Board Assy	26
120 MHz Receiver, 250 kHz Output	27
120 MHz Receiver PC Board Assy	28
250 kHz IF-Mon-Audio Board Schematic	29
250 kHz IF-Mon-Audio Board Assy	30
1200-2200 MHz Oscillator, Buffer, Tune Summation	31
1200-2200 MHz Oscillator PC Board Assy	32
AGC System Schematic	33
AGC System PC Board Assy	34
Scope Interconnect	35
Scope Schematic	36
Scope Main Board Assy Drawing	37
Spectrum Analyzer Interconnect	38
Spectrum Analyzer Test Interconnect	39
Inverter Board Schematic for the Spectrum Analyzer	40
Spectrum Analyzer Inverter PC Board Assy	41
Spectrum Analyzer Board No. 1 Schematic	42
Spectrum Analyzer Board No. 2 Schematic	43

Spectrum Analyzer PC Board Assy Board No. 1 44
Spectrum Analyzer Board No. 2 Assy 45
TCXO Output Distribution Schematic 46
TCXO Output Dist Amp Assy 47
Change Notice 1, Duty Cycle Regulator 48
Change Notice 2, Rear Panel 49
FM/AM Gen Schematic Wide Dev FM 50
FM/AM Generator PC Board Assy 51
Dual Tone Generator Circuit Schematic 52
Dual Tone Generator Board No. 1 Assy 53
Dual Tone Generator Board No. 2 Assy 54
Dual Tone Generator PC Board No. 3 Assy 55
First Mixer and Switch Circuit Schematic 56
Power Monitor Assy Circuit Schematic 57
XMTR Sensor Assy Circuit Schematic 58
Relay Driver Circuit Schematic 59
Relay Driver PC Board Assy 60
High Level Amp Circuit Schematic 61
High Level Amp PC Board No. 1 Assy 62
High Level Amp PC Board No. 2 Assy 63

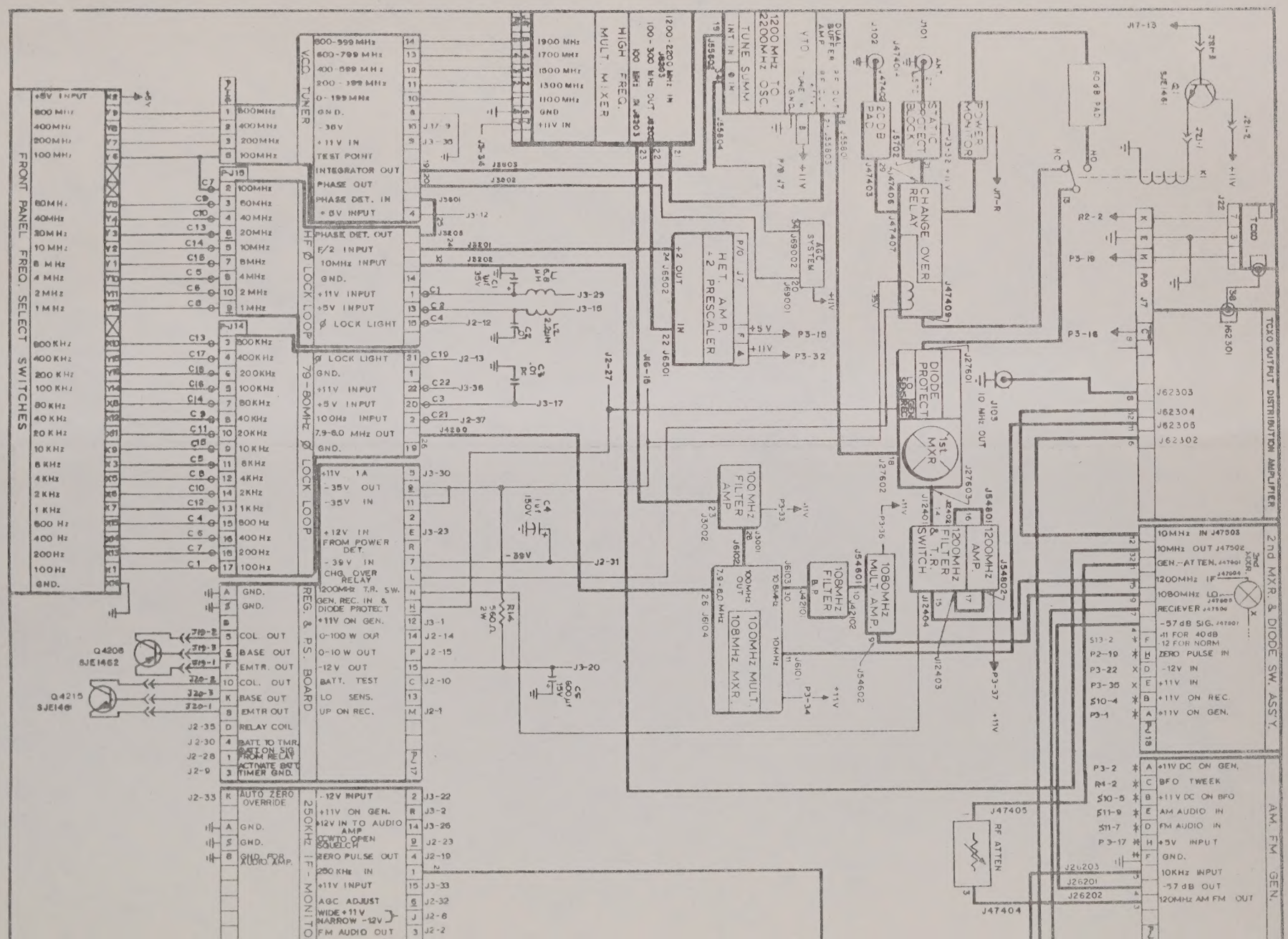
FRONT PANEL FREQ. SELECT SWITCHES
VCO TUNER
HIGH FREQ. MULT. MIXER
TUNE SUMM
VTO
DUAL BUFFER AMP
STATIC PROTECT BLOCK
POWER MONITOR
CHANGE OVER RELAY
ACC SYSTEM
HET. AMP. ÷2 PRESCALER
DIODE PROTECT
1st MXR
100 MHZ FILTER AMP
1200MHZ FILTER & T.R. SWITCH
1200MHZ AMP.
1080MHZ MULT. AMP.
108MHZ FILTER B.P.
100MHZ MULT. MXR.
RF ATTEN
TCXO OUTPUT DISTRIBUTION AMPLIFIER
2nd MXR. & DIODE SW. ASS'Y.
AM. FM GEN.
IF Ø LOCK LOOP
79-80MHz Ø LOCK LOOP
REG. & P.S. BOARD
250KHz IF-MONITOR
AUTO ZERO OVERRIDE
GND. FOR AUDIO AMP.
Q4206 SJE1462
Q4215 SJE1461

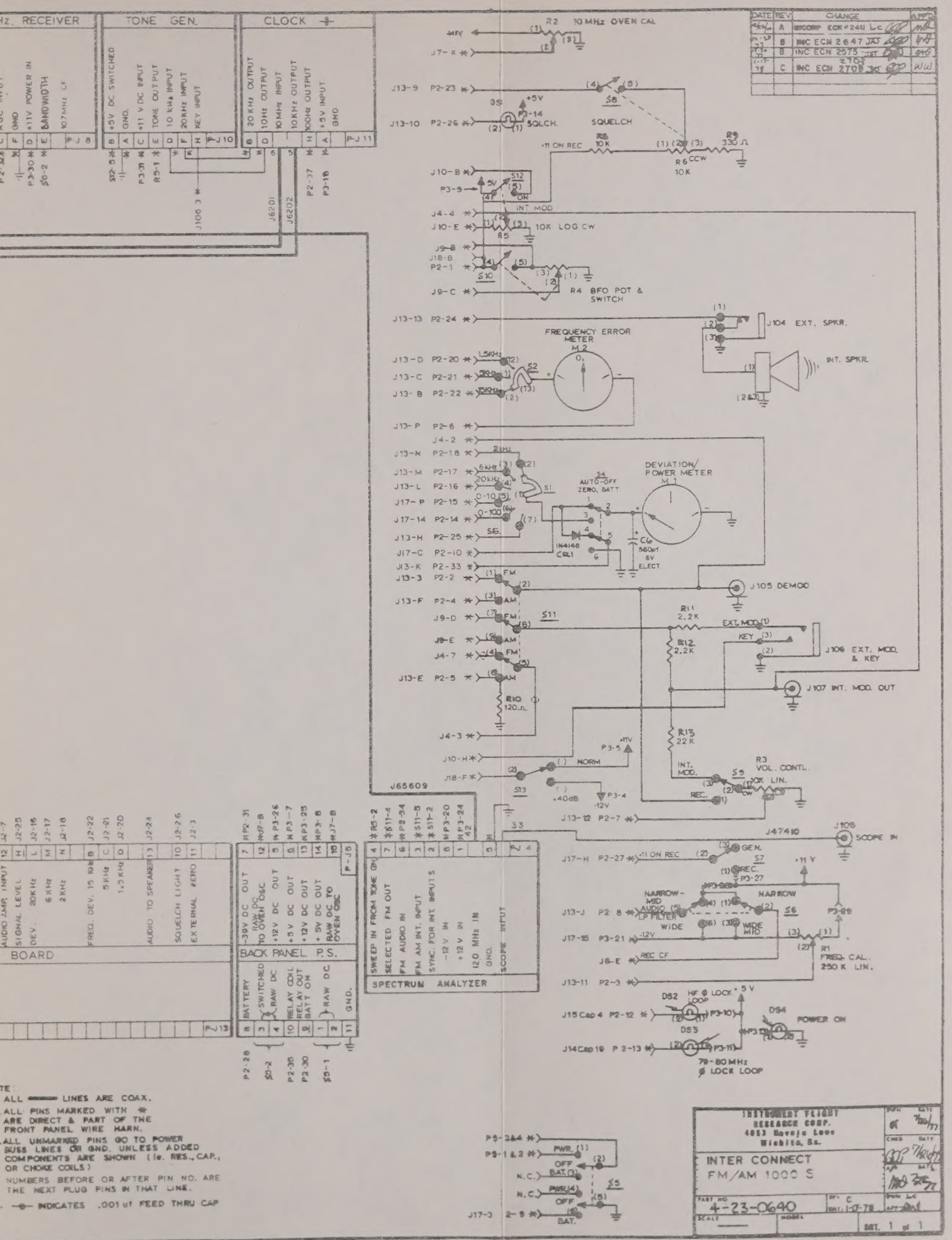

DATE	REV.	CHANGE	APPD
4-6-77	A	INCORP ECN #2411 LC	
7-13-77	B	INC ECN 2647 JRJ	
7-13-77	B	INC ECN 2575	
1-10-78	C	INC ECN 2702 2708	WW

NOTE:
1. ALL ═══ LINES ARE COAX.
2. ALL PINS MARKED WITH ✱ ARE DIRECT & PART OF THE FRONT PANEL WIRE HARN.
3. ALL UNMARKED PINS GO TO POWER BUSS LINES OR GND. UNLESS ADDED COMPONENTS ARE SHOWN (ie. RES., CAP., OR CHOKE COILS)
4. NUMBERS BEFORE OR AFTER PIN NO. ARE THE NEXT PLUG PINS IN THAT LINE.
5. —⊕— INDICATES .001 uf FEED THRU CAP

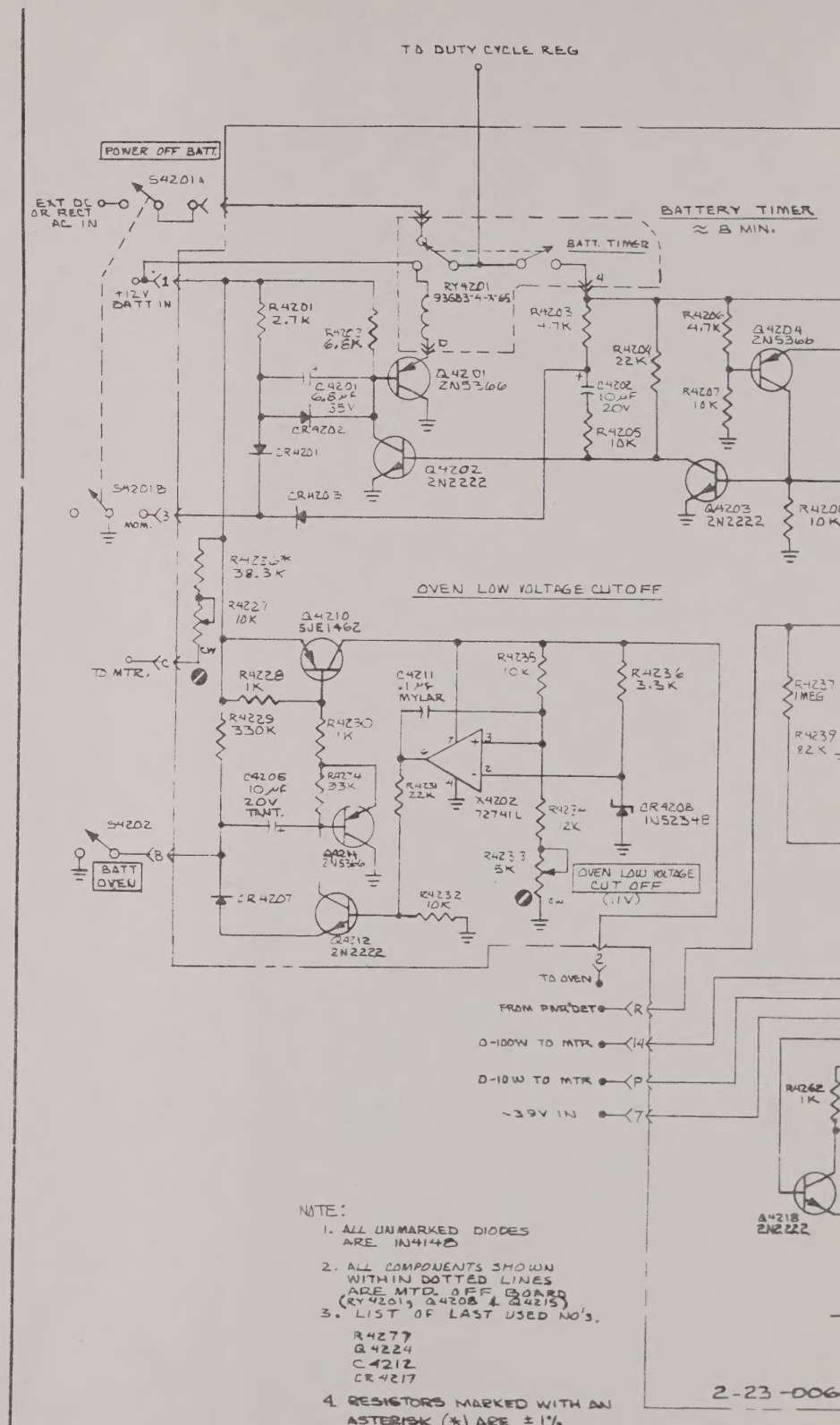

NOTE:

1. ALL UNMARKED DIODES ARE 1N4148
2. ALL COMPONENTS SHOWN WITHIN DOTTED LINES ARE MTD. OFF BOARD (RY4201, Q4208 & Q4215)
3. LIST OF LAST USED NO'S.

   R4277
   Q4224
   C4212
   CR4217

4. RESISTORS MARKED WITH AN ASTERISK (*) ARE ± 1%
5. Q4208 & 4210 ARE 2N5195 ON SOME UNITS.
6. Q4215 IS 2N5192 ON SOME UNITS.
7. Q4202, Q4203, Q4212, Q4218, & Q4219 ARE 2N3415 ON SOME UNITS.

DATE	REV	CHANGE	APP'D
7/17/75	A	INCORPORATED ECN # 206	
7/24/75	B	INCORPORATED ECN # 317	
7/30/75	C	INCORPORATED ECN # 336	
8/6/75	D	INCORPORATED ECN # 419 GLD	
8/22/75	E	INCORPORATED ECN # 592 JNV	
5-14-75	F	INC ECN 571 & 677	
5-29-75	G	INC ECN # 743	
6-27-75	H	INC ECN 799	
11-10-75	J	INC ECN # 1135	
2-9-76	K	INCORP ECN, 290, 210, 313	
5-11-76	L	INCORP ECN # 484	
6-16-76	M	INCORPORATED ECN # 620	
7/1/76	N	INCORP ECN # 64	
4/77	P	INC ECN # 842 RKK	
8/29/78	R	INC ECN # 1537	
1/26/79	S	INC ECN 2652	

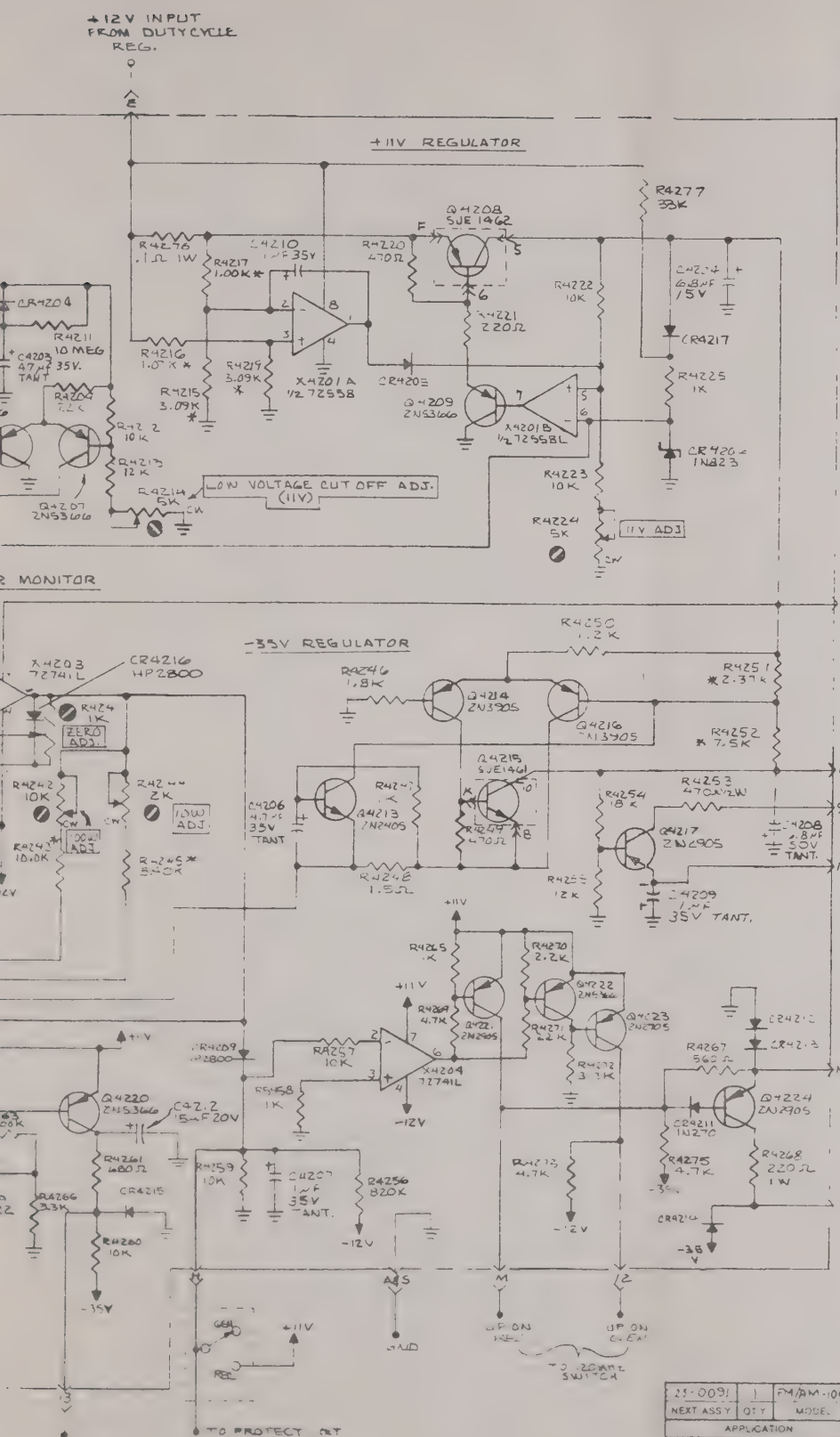

23-0091	1	FM/AM-1000			SCHEMATIC
NEXT ASSY	QTY	MODEL	ITEM	REQ'D	PART NO. / DESCRIPTION

APPLICATION — LIST OF MATERIALS

TOLERANCES — UNLESS OTHERWISE SPECIFIED

INSTRUMENT FLIGHT RESEARCH CORPORATION WICHITA KANSAS

MATERIAL — TREATMENT — FINISH

SHEET 1 OF 1

2-23-0060 ARTWORK

1-23-0091 PARTS LIST

NOTES:

1. ALL RESISTORS ARE 1/4 W., 10% TOLERANCE EXCEPT AS NOTED.
2. ALL CAPACITOR VALUES ARE IN µF EXCEPT AS NOTED.
3. COMPONENT LEADS MAY EXTEND .04 TO .06 BEYOND BOTTOM OF BOARD AFTER SOLDERING.
4. MAXIMUM HEIGHT OF COMPONENTS TO BE .35 FROM COMPONENT SIDE OF BOARD.
5.
6. * NOTES 1%, 1/4W RES.

R56 IS MTD ON BACK SIDE AS SHOWN IN BOTTOM VIEW ONLY ON "E" REV. ARTWORK. FOR "F" REV " WILL LOCATE AS IN THE LARGER VIEWS.

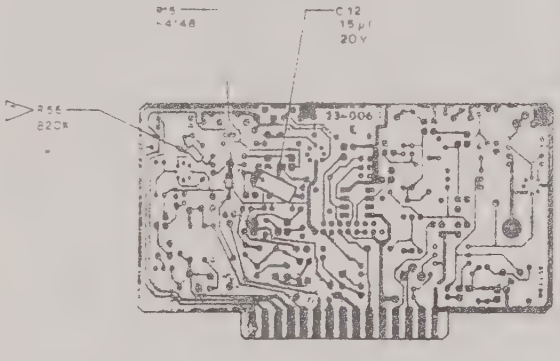

BOTTOM VIEW

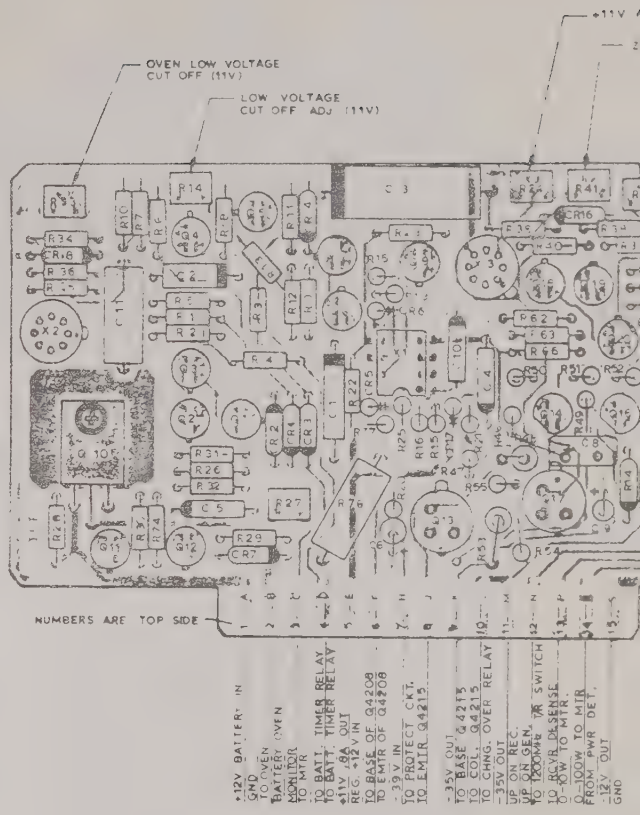

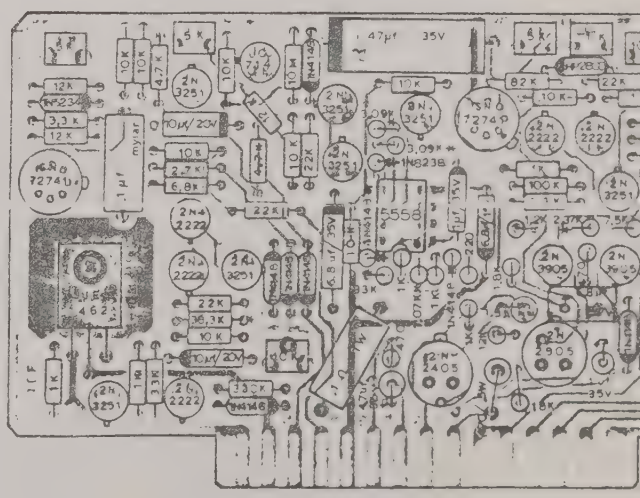

DATE	REV.	CHANGE	APP.
		ORIG REL.	
		INC ECN 2890	

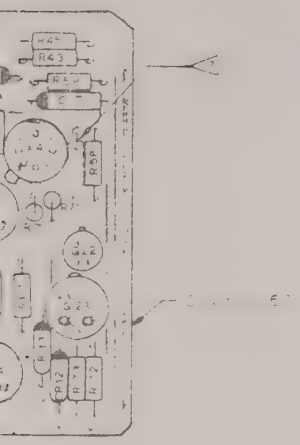

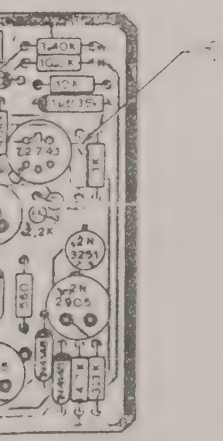

PART LIST No. 1-23-0091
SCHEMATIC No. 3-23-0042

ITEM	REQD	PART NO	DESCRIPTION
1	1	23-0091	REG & PS BD ASSY.

LIST OF MATERIALS

TOLERANCES

-IFR INC-
WICHITA KANSAS

REGULATOR & POWER SUPPLY BOARD (FM AM 1000/A)

D 4-23-0091

2X1

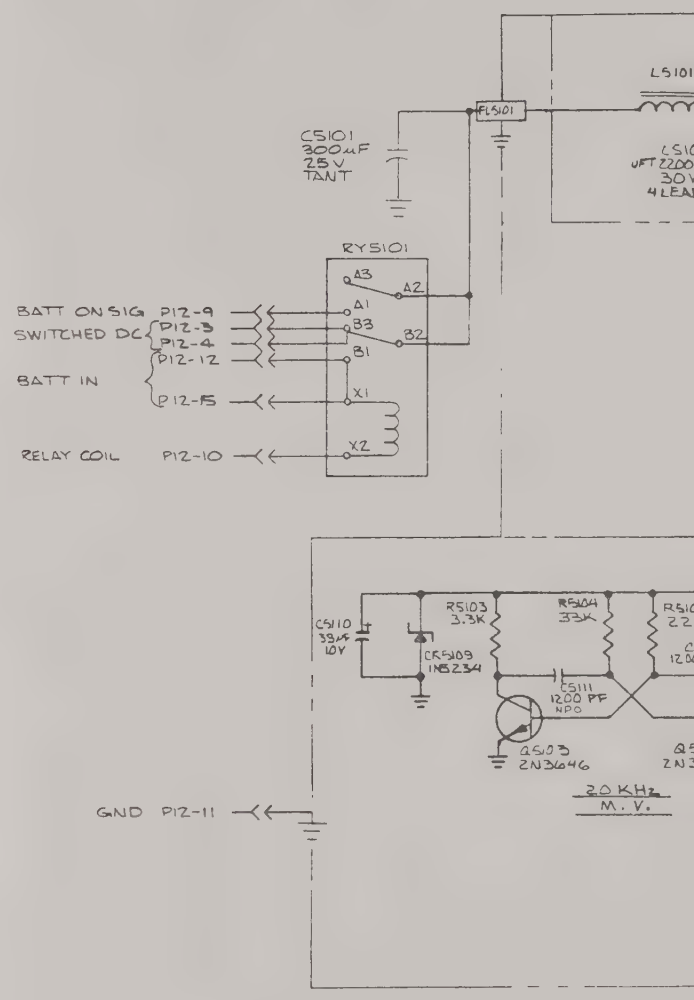
LS101
FUS101
C5101
300µF
25V
TANT
RY5101
A3
A2
A1
B3
B2
B1
X1
X2
BATT ON SIG P12-9
SWITCHED DC
P12-3
P12-4
P12-12
BATT IN
P12-5
RELAY COIL P12-10
C5110
33µF
10V
CR5109
1N5234
R5103
3.3K
R5104
33K
C5111
1200 PF
NPO
Q5103
2N3646
20 KHz
M.V.
GND P12-11

NO

1.

2. *

3. **

DATE	REV	CHANGE	APP'D
2-27-74	A	INC. ECN. # 063 LQ	
4/2/75	B	INCORPORATED ECN # 289 SSD.	
5-7-76	C	INCORPORATED ECN #536 & #567 JWW WF	MD
8/4/76	D	INCORPORATED ECN # 751 JWW	MD
3/9/77	E	INCORP. ECN # 1377 WW SD	MD
4/16/77	F	INCORP. ECN # 1394 WW SD	MD
8/8/77	G	INCORP. ECN # 2153 AA	MD
7/31/78	H	INC. ECN # 2482 & 2505 & 2529 LC	MD
1-3-79	J	INC ECN 2698	WW

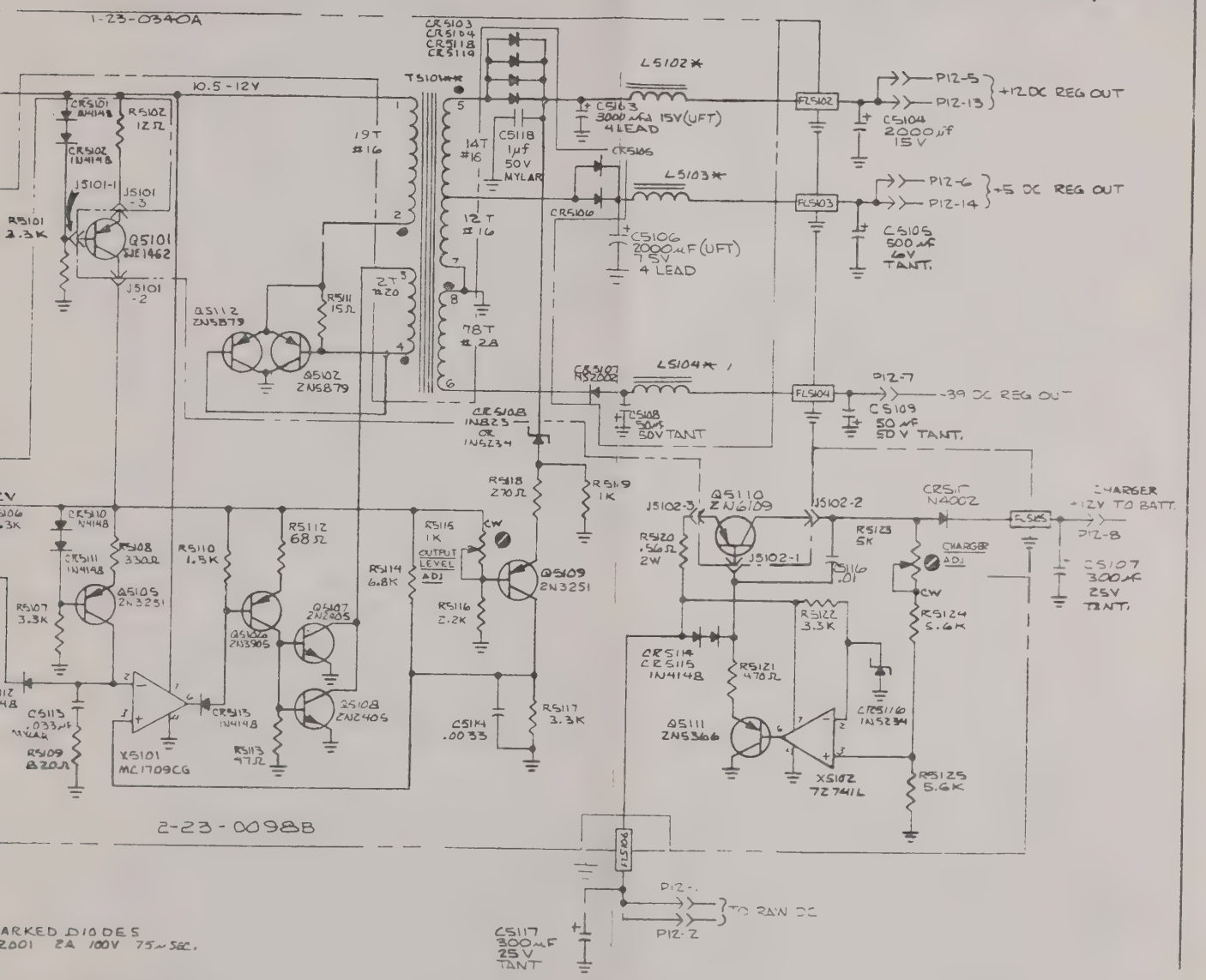

ARKED DIODES
2001 2A 100V 75~SEC.

4 ARE 28T #17 WIRE
ETICS CORE 55930-A2

ON MAGNETICS CORE
-A2

23-0090	1	PM/AM 1000	1	1	23-0051	SCHEMATIC
NEXT ASSY	QTY	MODEL	ITEM	REQ'D	PART NO	DESCRIPTION

APPLICATION

LIST OF MATERIALS

TOLERANCES
UNLESS OTHERWISE SPECIFIED
ALL DIMENSIONS APPLY AFTER FINISH
DECIMALS .XX = ± .010 .XXX = ± .005
ANGLES ± 1/2°
FRACTIONS ± 1/64
SURFACE ROUGHNESS 125
REMOVE ALL BURRS

DRAWN DATE 2-6-74
CHECKED DATE 4-8-74
APPROVED DATE 6-4-75

INSTRUMENT FLIGHT RESEARCH CORPORATION
WICHITA, KANSAS

TITLE DUTY CYCLE REG & BATT CHARGER SCHEMATIC

MATERIAL
TREATMENT
FINISH

SIZE C
PART NUMBER 3-23-0051
SCALE
SHEET 1 OF 2

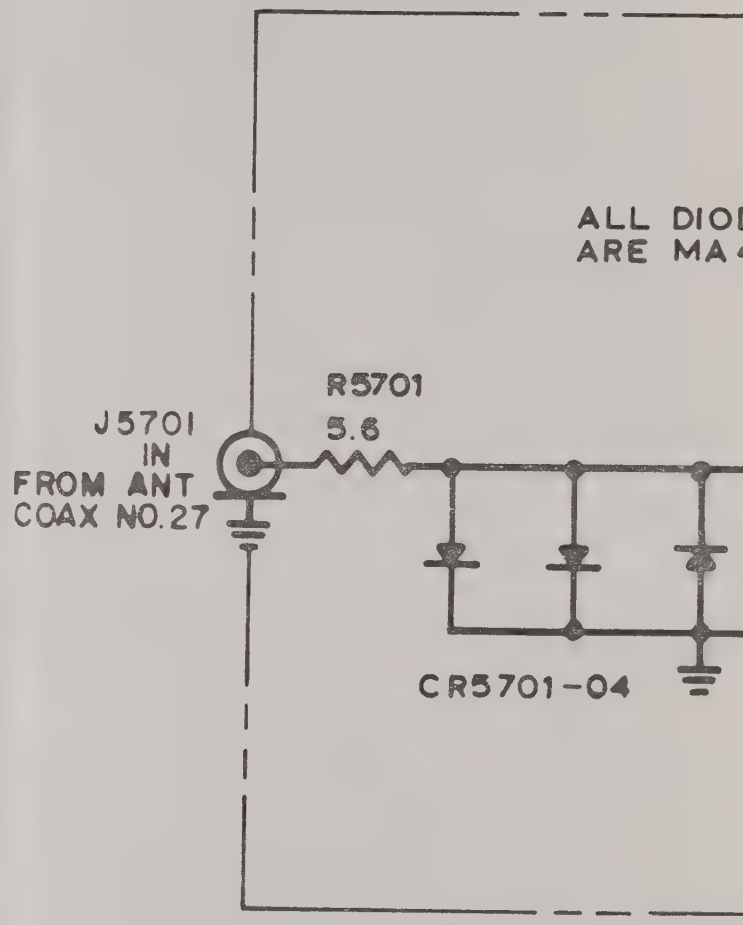

1/5/78	B	INCORP. ECN# 2678 AA	WW
6-1-76	A	INCORP ECN #1475 RKK	
DATE	REV	CHANGE	APP'D

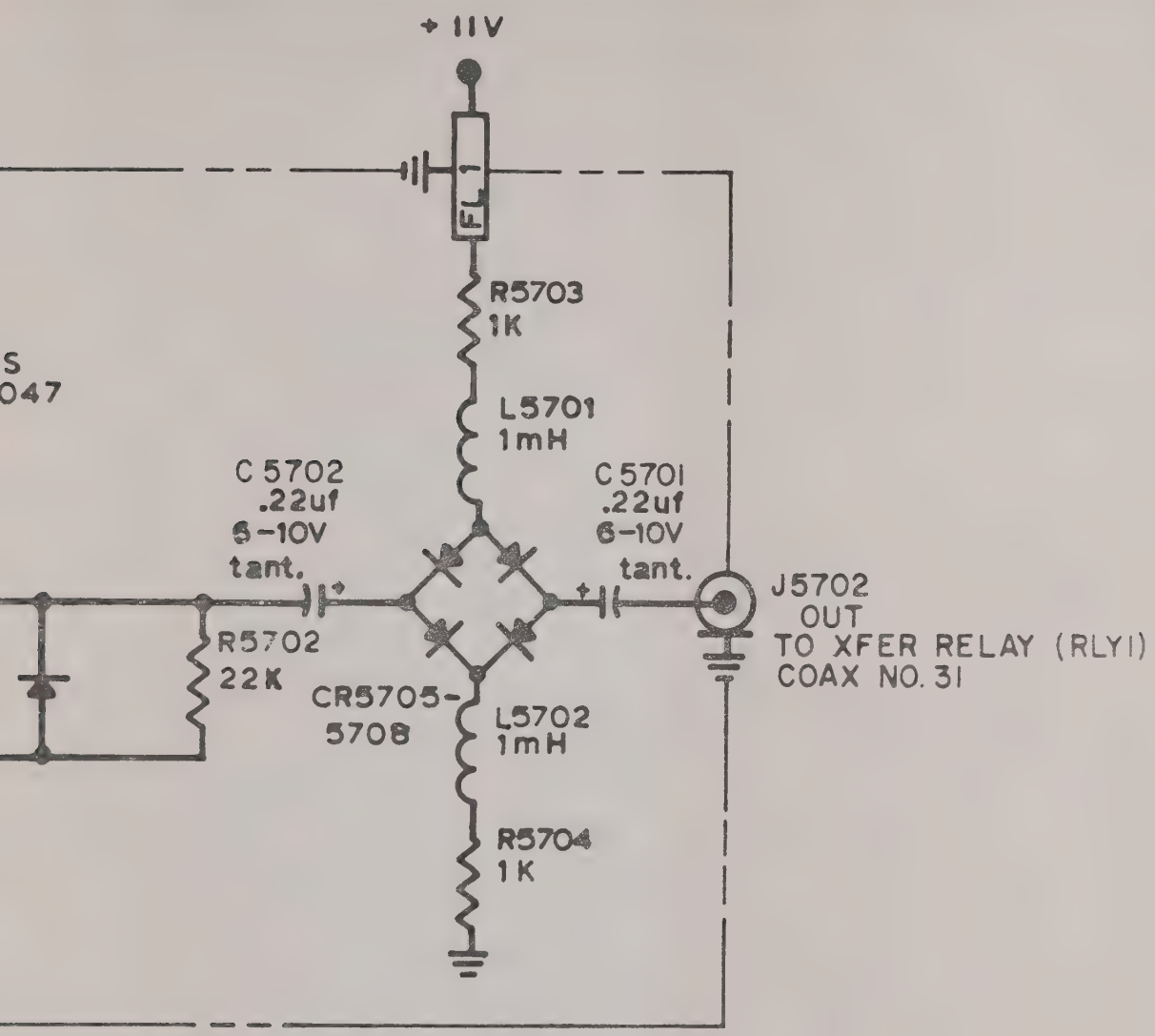

INSTRUMENT FLIGHT RESEARCH CORP. 4053 Navajo Lane Wichita, Ks.		DWN DATE B 10-16-75
		CHKD DATE JS 10-15-75
STATIC DISCHARGE PROTECTOR (FM-1000)		APP DATE RE 10-17-75
PART NO 1-23-0457	REV B DATE 1/5/78	DWN RKK APP MW
SCALE —	MODEL FM-1000	SHT. 1 of 1

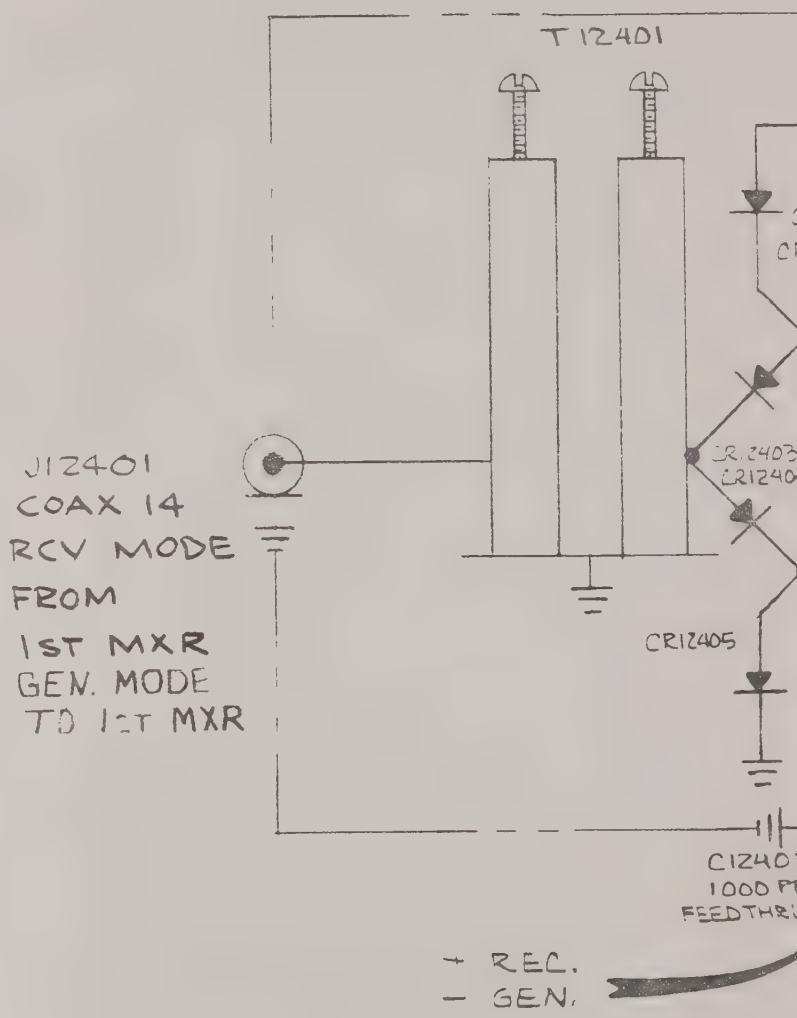

NOTE:

1. ALL DIODES ARE MA4704
2. ALL CHOKE COILS ARE .33

DATE	REV	CHANGE	APP'D
723	A	INC ECN # 1 LD	
7/75	B	INC ECN # 802 DLP	
4/12/78	C	INC ECN # 2914 JJ	NW

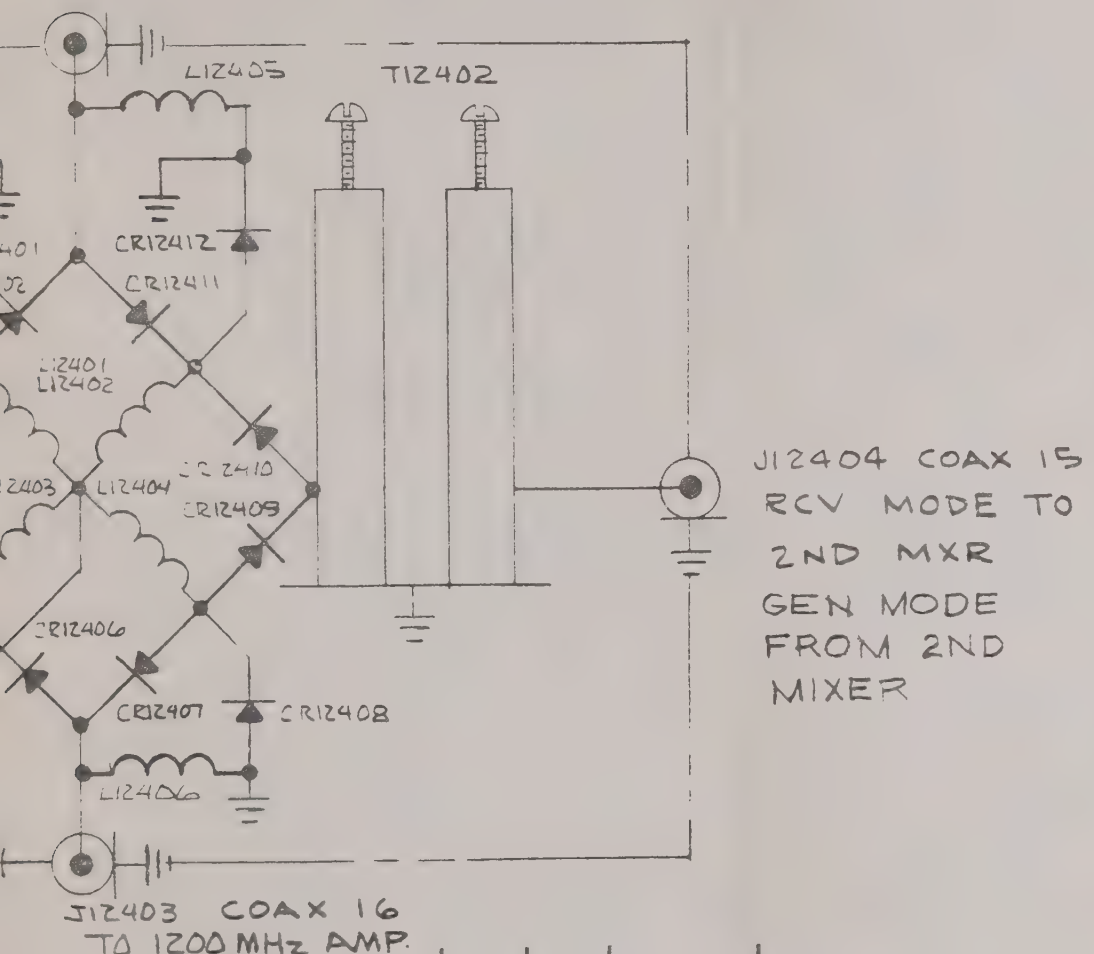

NEXT ASS'Y	QT'Y	MODEL	ITEM	REQ'D	PART NO.	DESCRIPTION
23-0297	1	FM/AM 1000			23-0124	SCHEMATIC

APPLICATION — LIST OF MATERIALS

TOLERANCES
UNLESS OTHERWISE SPECIFIED
ALL DIMENSIONS APPLY AFTER FINISH
DECIMALS: .xx = ± .010 .xxx = ± .005
ANGLES: ± 1/2°
FRACTIONS: ± 1/64
SURFACE ROUGHNESS 125
REMOVE ALL BURRS

DRAWN DATE 4-5-74
CHECKED DATE 8-6-74
APPROVED DATE 7-17-

INSTRUMENT FLIGHT RESEARCH CORPORATION
WICHITA, KANSAS.

TITLE 1200MHz FILTER & REC.-GEN. SW.

MATERIAL
TREATMENT
FINISH

SIZE A | PART NUMBER 1-23-0124 | REV C
SCALE — | WEIGHT — | SHEET 1 OF 1

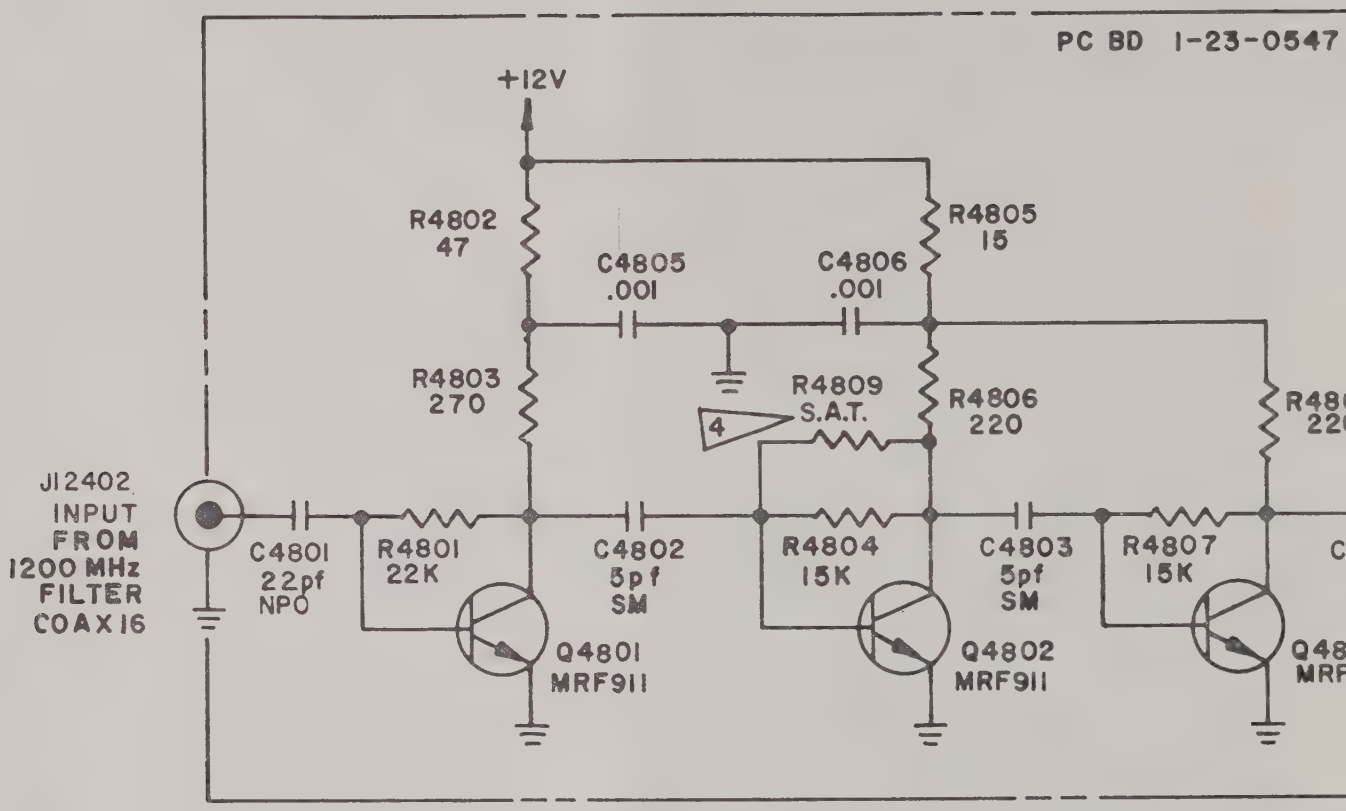

NOTES:

1. ALL RESISTORS ARE IN 1/4 W, 10%, AND VALUES ARE IN OHMS UNLESS OTHERWISE SPECIFIED.
2. ALL CAPACITORS ARE IN MICROFARADS UNLESS OTHERWISE SPECIFIED.
3. LAST NUMBERS USED: R4809, C4806, Q4803

4 SELECT AT TEST TO REDUCE GAIN

DATE	REV	CHANGE	APP'D
1-7-78	A	INC ECN 2682	WW
1-16-78	A-1	INC ECN 2709	WW

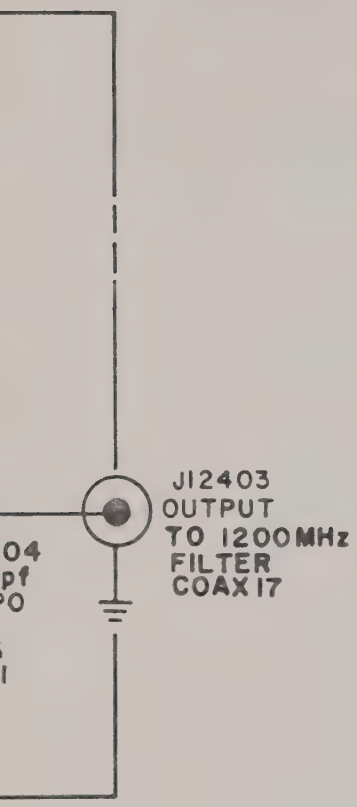

ITEM	REQ'D	PART NO.	DESCRIPTION
1	1	23-0548	SCHEMATIC

LIST OF MATERIALS

NEXT ASS'Y	23-0549
QT'Y	1
MODEL	MA/AM 1200A
APPLICATION	

TOLERANCES
UNLESS OTHERWISE SPECIFIED
ALL DIMENSIONS APPLY AFTER FINISH
DECIMALS: .xx = ± .010 .xxx = ± .005
ANGLES: ± 1/2°
FRACTIONS: ± 1/64
SURFACE ROUGHNESS 125
REMOVE ALL BURRS

DRAWN SSD DATE 5-5-76
CHECKED DATE 5-10-76
APPROVED DATE 8-8-76

-IFR INC-
WICHITA, KANSAS

TITLE
1200MHz AMPLIFIER

MATERIAL —
FINISH —

SIZE B | PART NUMBER 2-23-0548 | REV A-1
SCALE — | WEIGHT — | SHEET 1 OF 1

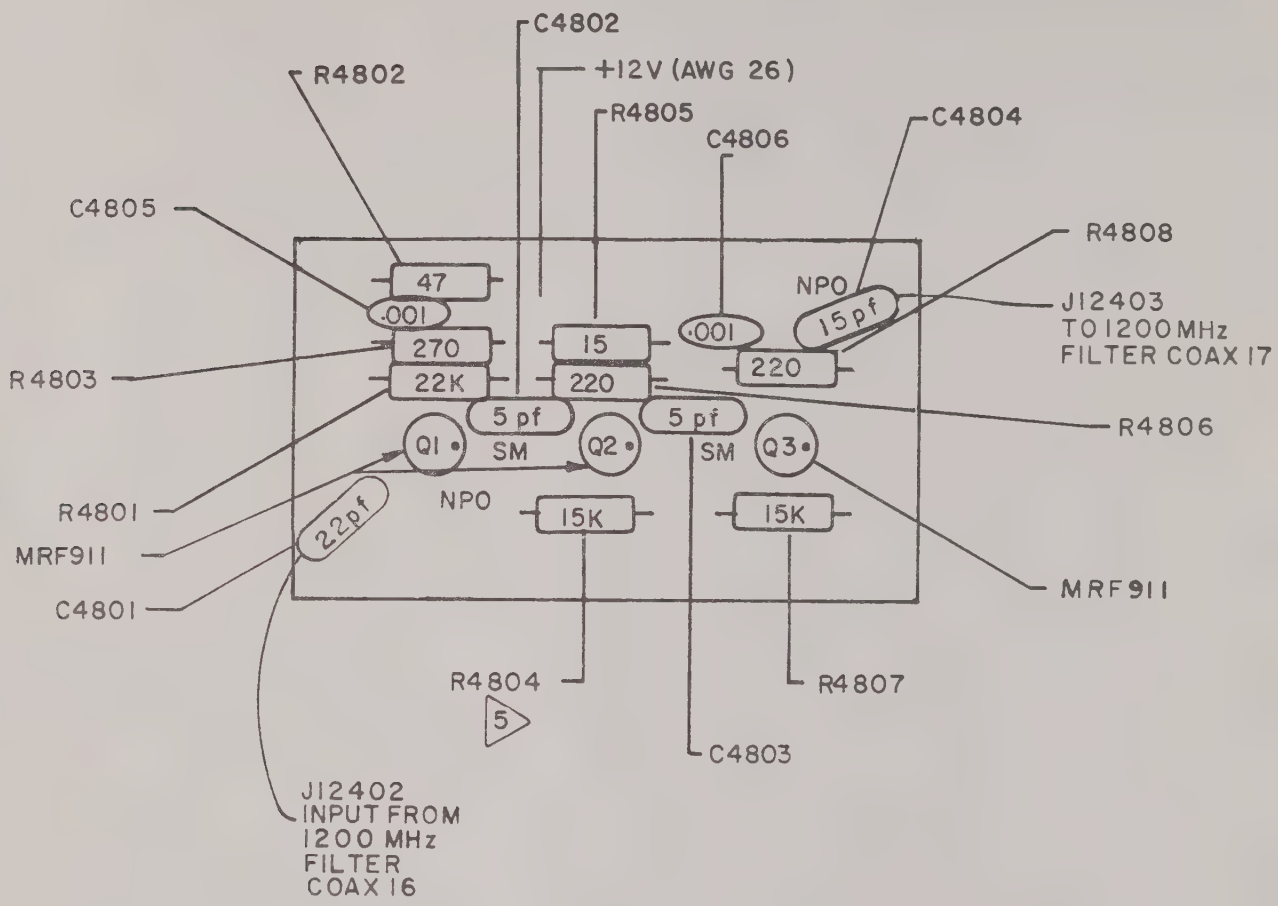

5 R4809 S.A.T PARALLELS R4804 AS REQ'D

4. MAXIMUM HEIGHT OF COMPONENTS FROM COMPONENT SIDE OF BOARD IS .35.

3. COMPONENT LEADS MAY EXTEND .04-.06 BEYOND BOTTOM OF BOARD AFTER SOLDERING

2. UNLESS OTHERWISE SPECIFIED:

ALL CAPACITORS ARE IN uF

ALL RESISTORS ARE 1/4W ±10%

1. REF DWG:

PC BOARD 1-23-0547

SCHEMATIC 2-23-0548

NOTES:

DATE	REV	CHANGE	APP'D
[illegible]	A	INITIAL RELEASE	[illegible]

NEXT ASS'Y	QT'Y	MODEL	ITEM	REQ'D	PART NO.	DESCRIPTION
23-0554	1	FM/AM1000S				
23-0554	1	FM/AM1000A	1	1	23-0549	ASSY P/L

APPLICATION

LIST OF MATERIALS

TOLERANCES
UNLESS OTHERWISE SPECIFIED
ALL DIMENSIONS APPLY AFTER FINISH
DECIMALS: ± .005
ANGLES: ± 1/2°
FRACTIONS: ± 1/64
SURFACE ROUGHNESS 125
REMOVE ALL BURRS

DRAWN DATE [illegible]
CHECKED DATE
APPROVED DATE

INSTRUMENT FLIGHT RESEARCH CORPORATION
WICHITA, KANSAS

TITLE
1200 Mhz AMPLIFIER
PC BD ASSY

MATERIAL
TREATMENT
FINISH

SIZE B
PART NUMBER 2-23-0549
REV A
SCALE
WEIGHT
SHEET 1 OF 1

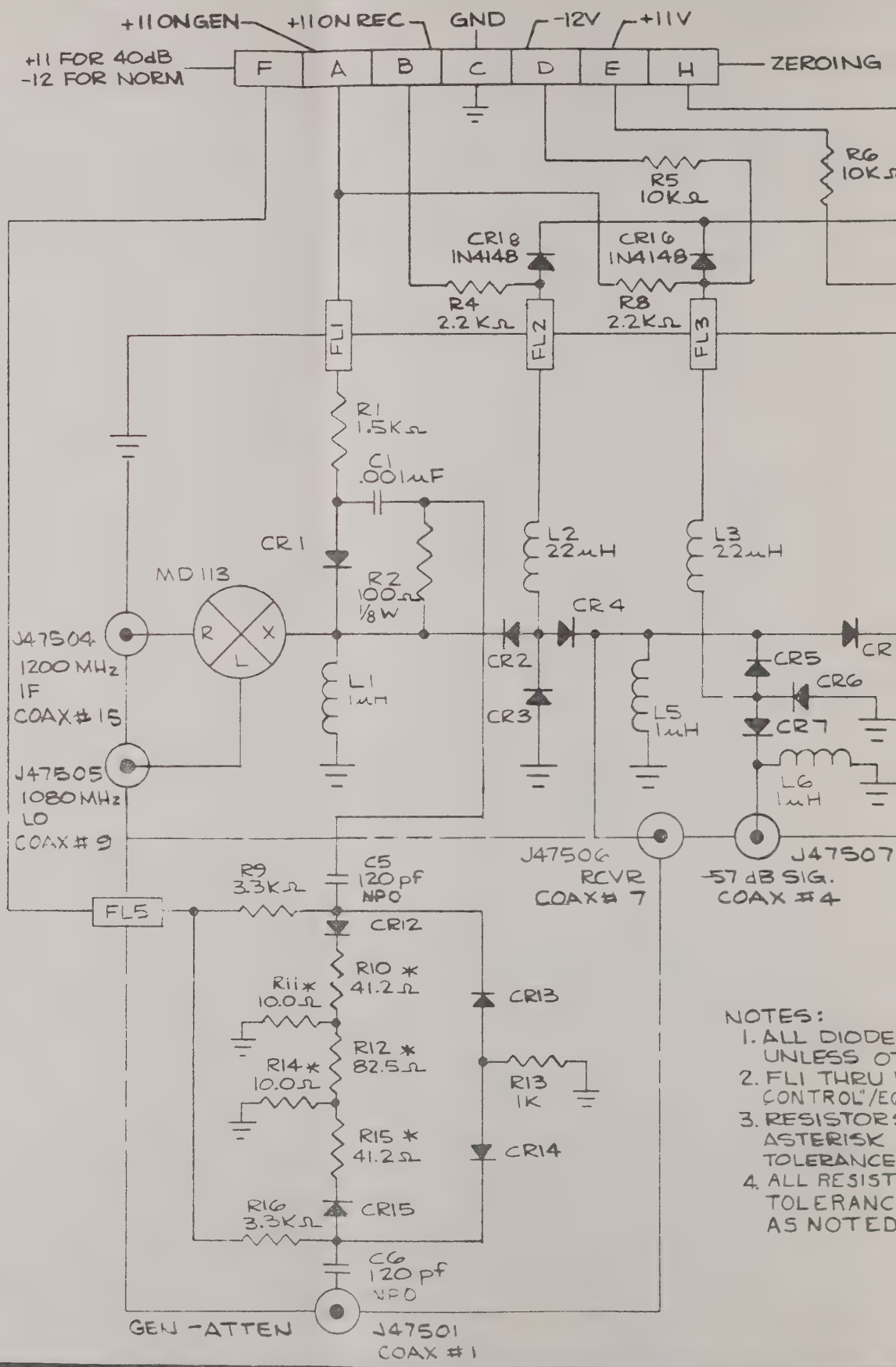
+11 ON GEN
+11 ON REC
GND
-12V
+11V
+11 FOR 40dB
-12 FOR NORM
F
A
B
C
D
E
H
ZEROING
R5
10KΩ
R6
10KΩ
CR18
1N4148
CR16
1N4148
R4
2.2KΩ
R8
2.2KΩ
FL1
FL2
FL3
R1
1.5KΩ
C1
.001μF
CR1
MD113
R2
100Ω
1/8W
L2
22μH
L3
22μH
CR4
J47504
1200 MHz
IF
COAX # 15
R
X
L
L1
1μH
CR2
CR3
CR5
CR6
CR7
L5
1μH
L6
1μH
J47505
1080 MHz
LO
COAX # 9
J47506
RCVR
COAX # 7
J47507
-57 dB SIG.
COAX # 4
R9
3.3KΩ
C5
120 pf
NPO
FL5
CR12
R10 *
41.2Ω
R11 *
10.0Ω
CR13
R12 *
82.5Ω
R14 *
10.0Ω
R13
1K
R15 *
41.2Ω
CR14
R16
3.3KΩ
CR15
C6
120 pf
NPO
GEN -ATTEN
J47501
COAX # 1
NOTES:
1. ALL DIODE
UNLESS O
2. FL1 THRU
CONTROL"/E
3. RESISTOR
ASTERISK
TOLERANCE
4. ALL RESIST
TOLERANC
AS NOTED

DATE	REV	CHANGE	APP'D
2-4-76	A	INCORP ECN #1271 SSO	
12-7-77	B	INC ECN # 2581 JAJ	
1-23-78	C	INC ECN 2709 JAJ	
9-8-78	D	INC ECN 2722 JAJ	

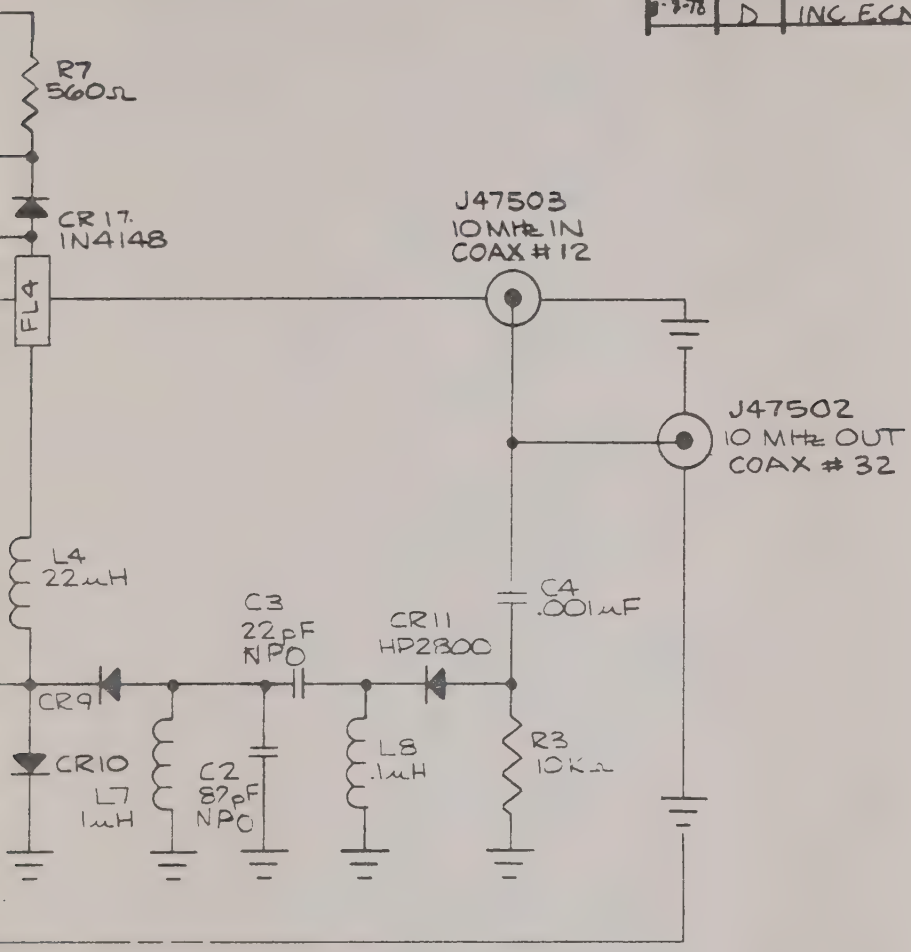

RE MA47047
RWISE SPECIFIED
ARE "SPECTRUM
51-712-001 FEEDTHRUS
MARKED WITH
ARE ±1%

S ARE 10%
OR 1/4 W EXCEPT

NEXT ASS'Y	QT'Y	MODEL	ITEM	REQ'D	PART NO.	DESCRIPTION
23-0462	1	FM/AM-1000/A	1	1	23-0475	SCHEMATIC

APPLICATION — LIST OF MATERIALS

TOLERANCES
UNLESS OTHERWISE SPECIFIED
ALL DIMENSIONS APPLY AFTER FINISH
DECIMALS: ± .005
ANGLES: ± 1/2°
FRACTIONS: ± 1/64
SURFACE ROUGHNESS 125
REMOVE ALL BURRS

DRAWN JNV DATE 10-29-75
CHECKED DATE 10-29-75
APPROVED DATE

INSTRUMENT FLIGHT RESEARCH CORPORATION
WICHITA, KANSAS

TITLE
SECOND MIXER-DIODE SWITCH
SCHEMATIC
FM/AM-1000/A

MATERIAL
TREATMENT
FINISH

SIZE B | PART NUMBER 2-23-0475 | REV D
SCALE | WEIGHT | SHEET 1 OF 1

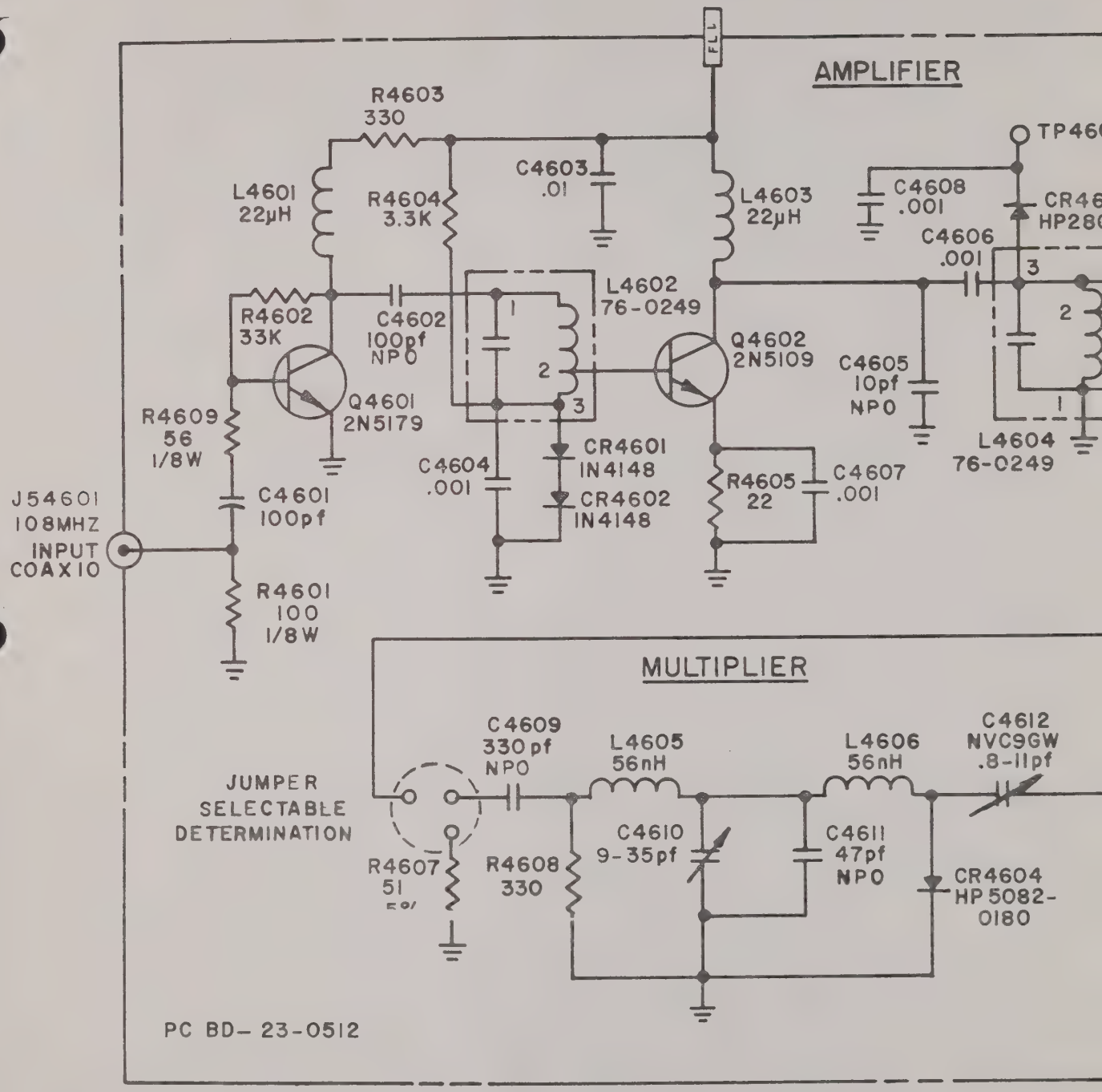

NOTES:

1. RESISTORS ARE 1/4 W, 10%, AND VALUES ARE IN OHMS UNLESS OTHERWISE S
2. CAPACITORS ARE IN MICROFARADS UNLESS OTHERWISE SPECIFIED.
3. LAST NUMBERS USED: R4609, C4612, CR4604, L4606, Q4602, TP4601

DATE	REV	CHANGE	APP'D
11 18 76	A	ADDED OUTPUT TUNELINE	
12-16-76	B	ADDED INPUT, TUNELINE NOMENCLATURE, ECN #1792 WW	
11-29-77	C	ECN# 2598 JAJ	
1-17-78	D	ECN 2709	

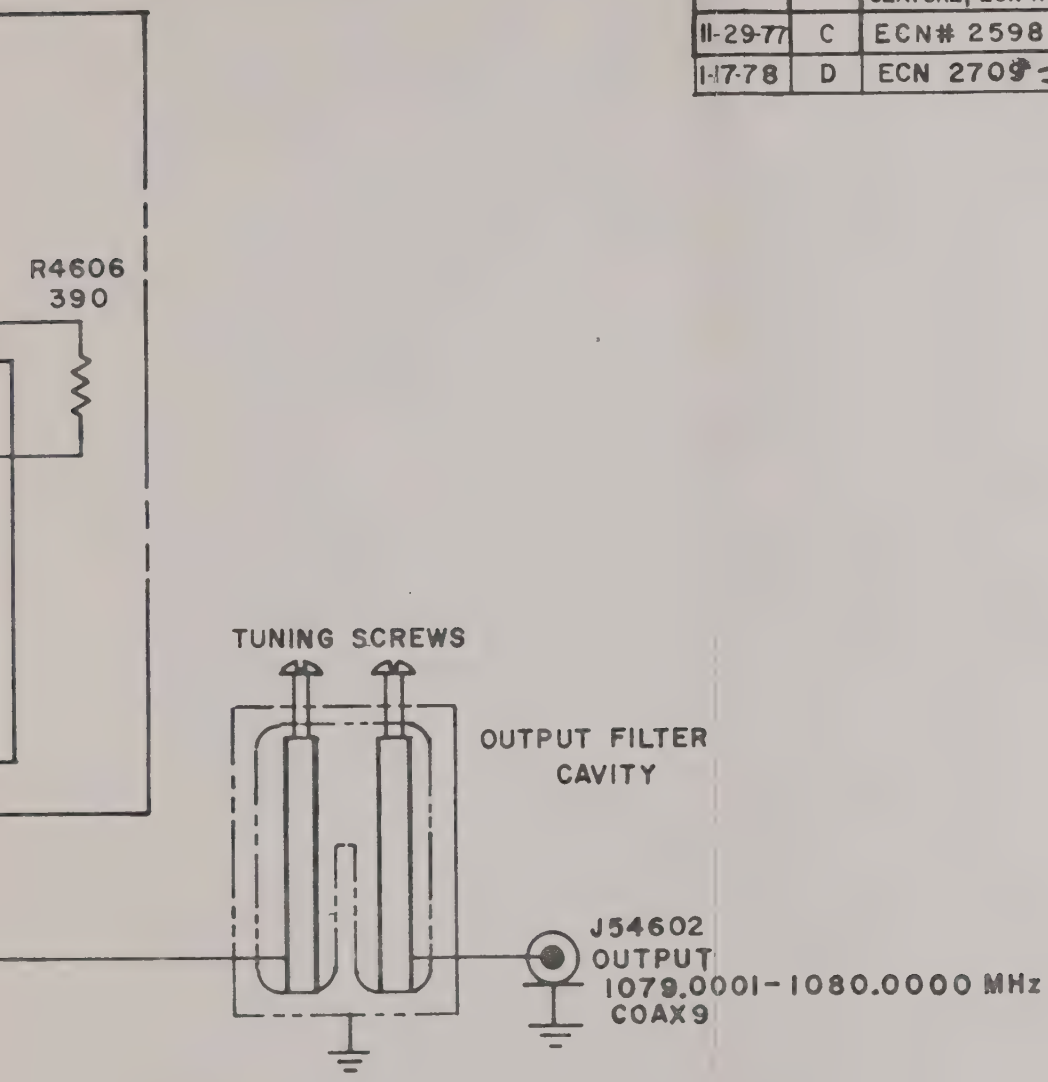

ITEM	REQ'D	PART NO.	DESCRIPTION
1	1	23-0546	SCHEMATIC

LIST OF MATERIALS

IFIED.

MODEL	
QTY	1
NEXT ASS'Y	23-0513
APPLICATION	

TOLERANCES
UNLESS OTHERWISE SPECIFIED
ALL DIMENSIONS APPLY AFTER FINISH
DECIMALS: .xx = ± .010 .xxx = ± .005
ANGLES ± 1/2°
FRACTIONS: ± 1/64
SURFACE ROUGHNESS 125
REMOVE ALL BURRS

DRAWN SSD DATE 4-23-76
CHECKED DATE
APPROVED DATE

MATERIAL —
FINISH —

-IFR INC-
WICHITA, KANSAS

TITLE
1080 MHz MULTIPLIER AMPLIFIER

SIZE B | PART NUMBER 2-23-0546 | REV D
SCALE | WEIGHT | SHEET 1 OF 1

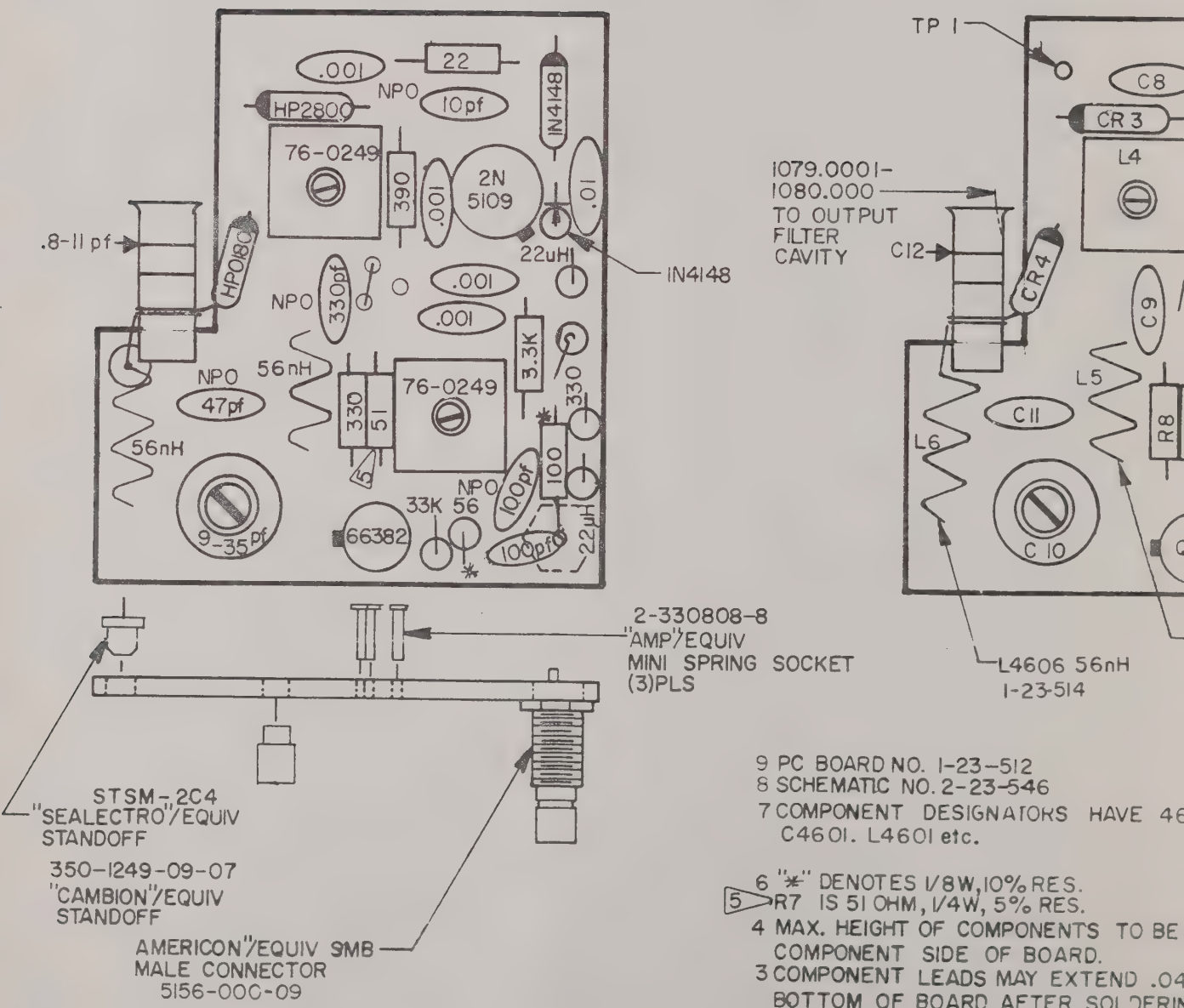

9 PC BOARD NO. 1-23-512
8 SCHEMATIC NO. 2-23-546
7 COMPONENT DESIGNATORS HAVE 46
C4601. L4601 etc.

6 "*" DENOTES 1/8W, 10% RES.
5 R7 IS 51 OHM, 1/4W, 5% RES.
4 MAX. HEIGHT OF COMPONENTS TO BE
COMPONENT SIDE OF BOARD.
3 COMPONENT LEADS MAY EXTEND .04
BOTTOM OF BOARD AFTER SOLDERIN
2 ALL CAPACITORS ARE IN µf EXCEPT AS
1 ALL RESISTORS ARE 1/4W, 10% TOL. E
NOTES

DATE	REV	CHANGE	APP'D
11-9-77	D	ORIGINAL RELEASE TT	
1-16-78	D-1	INC ECN 2709 JAS	
6-28-79	D-2	INC ECN# 3050	

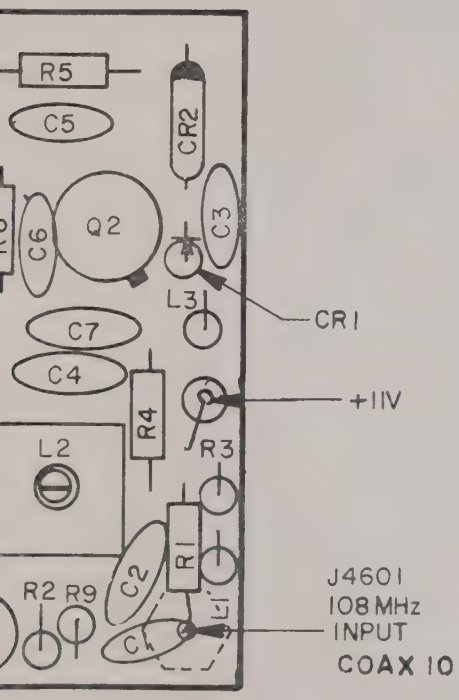

605 56nH
23-514

REFIX i.e. R4601,

3 FROM

0 .06 BEYOND

OTED.
EPT AS NOTED.

NEXT ASS'Y	QT'Y	MODEL	ITEM	REQ'D	PART NO.	DESCRIPTION
23-516	1	FM/AM1000A/S				

APPLICATION | LIST OF MATERIALS

TOLERANCES
UNLESS OTHERWISE SPECIFIED
ALL DIMENSIONS APPLY AFTER FINISH
DECIMALS: ± .005
ANGLES ± 1/2°
FRACTIONS ± 1/64
SURFACE ROUGHNESS 125
REMOVE ALL BURRS

DRAWN TenEyck DATE 11-9-77
CHECKED DATE
APPROVED DATE

INSTRUMENT FLIGHT RESEARCH CORPORATION
WICHITA, KANSAS

TITLE
1080MHz MULTIPLIER AMPLIFIER
PC BOARD ASSEMBLY

MATERIAL
TREATMENT
FINISH

SIZE B | PART NUMBER 2-23-513 | REV D-2
SCALE 2:1 | WEIGHT — | SHEET 1 OF 1

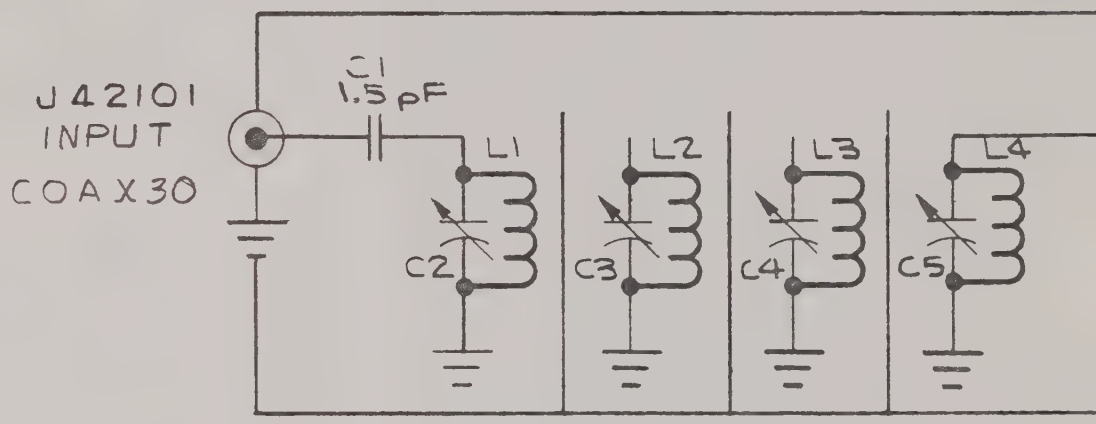

NOTES:

1. C2 THRU C5 ARE VC26G "JFD"/EQUIV. TRIMMER CAPS.
2. L1 THRU L4 ARE 9 TURNS #22 GUAGE ENAMEL COATED COPPER WIRE WOUND ON 7/16 DIA COIL FORMS PLACED AROUND C2 THRU C5.

	1	FM/AM
NEXT ASS'Y	QT'Y	MO
APPLICATION		

TOLERANCES

UNLESS OTHERWISE SPECIFIED
ALL DIMENSIONS APPLY AFTER FINIS
DECIMALS: .xx = ± .010 .xxx = ±
ANGLES: ± 1/2°
FRACTIONS: ± 1/64
SURFACE ROUGHNESS 125
REMOVE ALL BURRS

MATERIAL —
TREATMENT —
FINISH —

DATE	REV	CHANGE	APP'D
1-17-78	A	INC ECN 2709 JAJ	WW

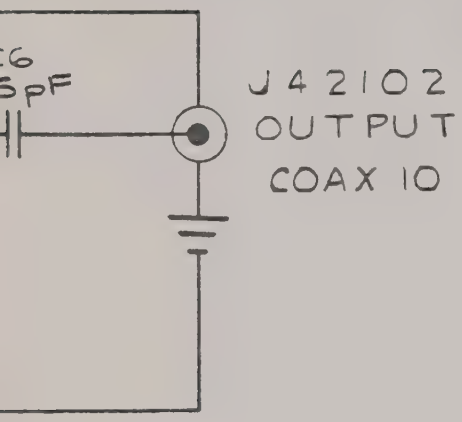

	ITEM	REQ'D	PART NO.	DESCRIPTION
000	1	1	23-0421	108 MHz FILTER SCHEM.

LIST OF MATERIALS

DRAWN JNV DATE 5/21/75	**INSTRUMENT FLIGHT RESEARCH CORPORATION** WICHITA, KANSAS.
CHECKED DATE	TITLE 108 MHz FILTER SCHEMATIC FM/AM-1000
APPROVED DATE	
	SIZE / PART NUMBER 1-23-0421 / REV A
	SCALE — / WEIGHT — / SHEET 1 OF 1

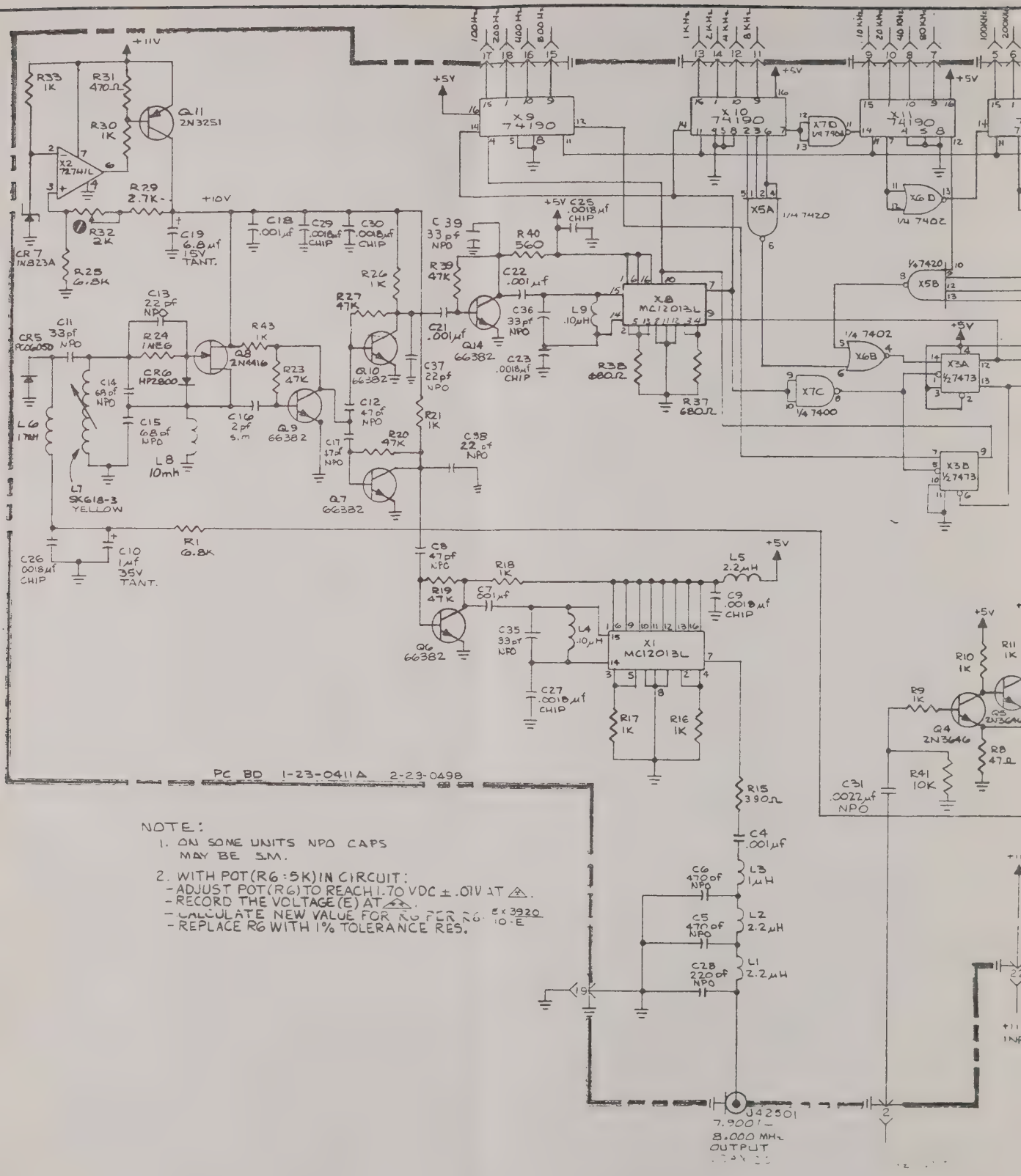
PC BD 1-23-0411A 2-23-0498
NOTE:
1. ON SOME UNITS NPO CAPS MAY BE S.M.
2. WITH POT(R6:5K) IN CIRCUIT:
- ADJUST POT(R6) TO REACH 1.70 VDC ± .01V AT 4.
- RECORD THE VOLTAGE(E) AT 4.
- CALCULATE NEW VALUE FOR R6 PER R6 = 5 x 3920 / 10-E
- REPLACE R6 WITH 1% TOLERANCE RES.
J42501
7.9001 – 8.000 MHz OUTPUT
+11V
+10V
+5V
R33 1K
R31 470Ω
R30 1K
Q11 2N3251
X2 72741L
R29 2.7K
R32 2K
R28 6.8K
CR7 1N823A
C19 6.8µf 15V TANT.
C18 .001µf
C29 .0018µf CHIP
C30 .0018µf CHIP
C39 33pf NPO
R40 560
C25 .0018µf CHIP
X9 74190
X10 74190
X11 74190
X7D 1/4 7400
X5A 1/4 7420
X6D 1/4 7402
X5B 1/4 7420
X6B 1/4 7402
X3A 1/2 7473
X3B 1/2 7473
X7C 1/4 7400
R39 47K
C22 .001µf
R26 1K
R27 47K
C21 .001µf
Q14 66382
C36 33pf NPO
L9 .10µH
X8 MC12013L
C23 .0018µf CHIP
R38 680Ω
R37 680Ω
C13 22pf NPO
C11 33pf NPO
CR5 PC06050
R24 1NEG
CR6 HP2800
Q8 2N4416
R43 1K
R23 47K
Q10 66382
C37 22pf NPO
C14 68pf NPO
C15 68pf NPO
C16 2pf S.M.
Q9 66382
C12 47pf NPO
C17 47pf NPO
R20 47K
R21 1K
C38 22pf NPO
L6 1mH
L8 10mH
L7 SK618-3 YELLOW
Q7 66382
C26 .0018µf CHIP
C10 1µf 35V TANT.
R1 6.8K
C8 47pf NPO
R18 1K
L5 2.2µH
C9 .0018µf CHIP
R19 47K
C7 .001µf
C35 33pf NPO
L4 .10µH
X1 MC12013L
Q6 66382
C27 .0018µf CHIP
R17 1K
R16 1K
R10 1K
R11 1K
R9 1K
Q3 2N3646
Q4 2N3646
R8 47Ω
R41 10K
C31 .0022µf NPO
R15 390Ω
C4 .001µf
C6 470pf NPO
L3 1µH
C5 470pf NPO
L2 2.2µH
C28 220pf NPO
L1 2.2µH

DATE	REV	CHANGE	APP'D
4-15-76	A	INC ECN #1419 & 1426 SSD	MJ
4-26-76	B	INCORP. ECN #1430 WW SSD	MJ
4-29-76	C	INCORP. ECN #1450 WW SSD	MJ
6-2-76	D	INCORP ECN #1474 RKK WW	MJ
7-30-76	E	INC ECN'S #1492 & 1584 RKK	MJ
8-20-76	F	INC ECN 1745 RKK WW	MJ
2-6-77	G	INC ECN 1900	MJ
3-30-77	H	INCORP ECN #1965 JNV RKK	MJ
8-4-77	J	INCORP. ECN # 2298 LWC	RE
4-10-78	K	INC ECN 2544 TAS	WW
4-6-78	L	INC ECN 2922	WW
6-22-78	M	INC ECN #3042 LW	WW

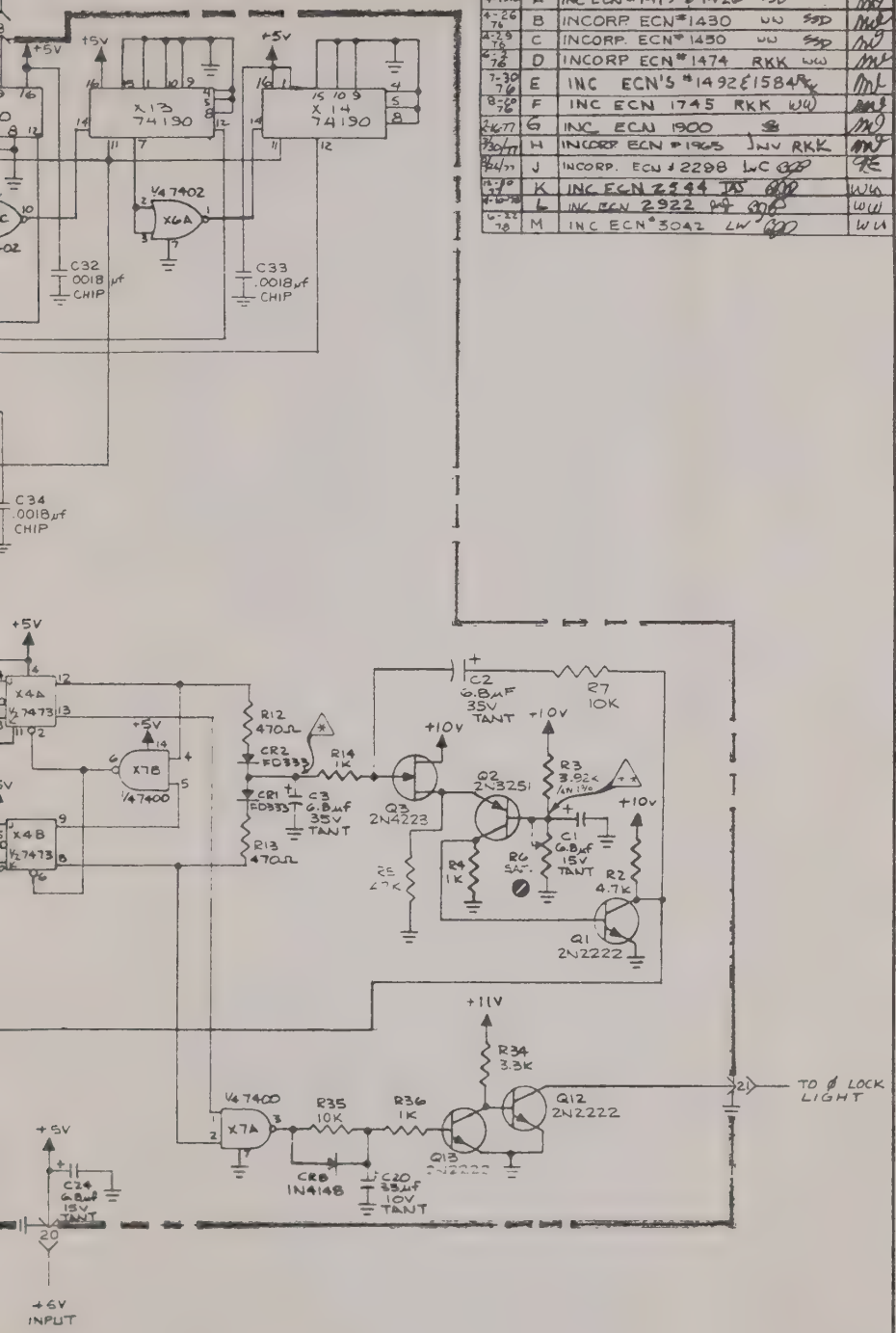

LAST NUMBERS USED:
2.4
R42
CR8 (3 & 4 NOT USED)
L9
C38
X14

23-424	1	FM 1V-1000A	1	1	23-425	SCHEMATIC
NEXT ASSY	QTY	MODEL	ITEM	REQ'D	PART NO.	DESCRIPTION

APPLICATION — LIST OF MATERIALS

TOLERANCES
UNLESS OTHERWISE SPECIFIED
ALL DIMENSIONS APPLY AFTER FINISH
DECIMALS .XX = ± .010 .XXX = ± .005
ANGLES ± 1/2°
FRACTIONS = 1/64
SURFACE ROUGHNESS 125
REMOVE ALL BURRS

DRAWN SSD DATE 7-22-75
CHECKED DLP DATE 7-22-75
APPROVED DATE

MATERIAL —
TREATMENT —
FINISH —

INSTRUMENT FLIGHT RESEARCH CORPORATION
WICHITA, KANSAS

TITLE
79-80 MHz LOOP
SCHEMATIC
FM/AM 1000A

SIZE C — PART NUMBER 3-23-425 — REV M
SCALE — WEIGHT — SHEET — OF —

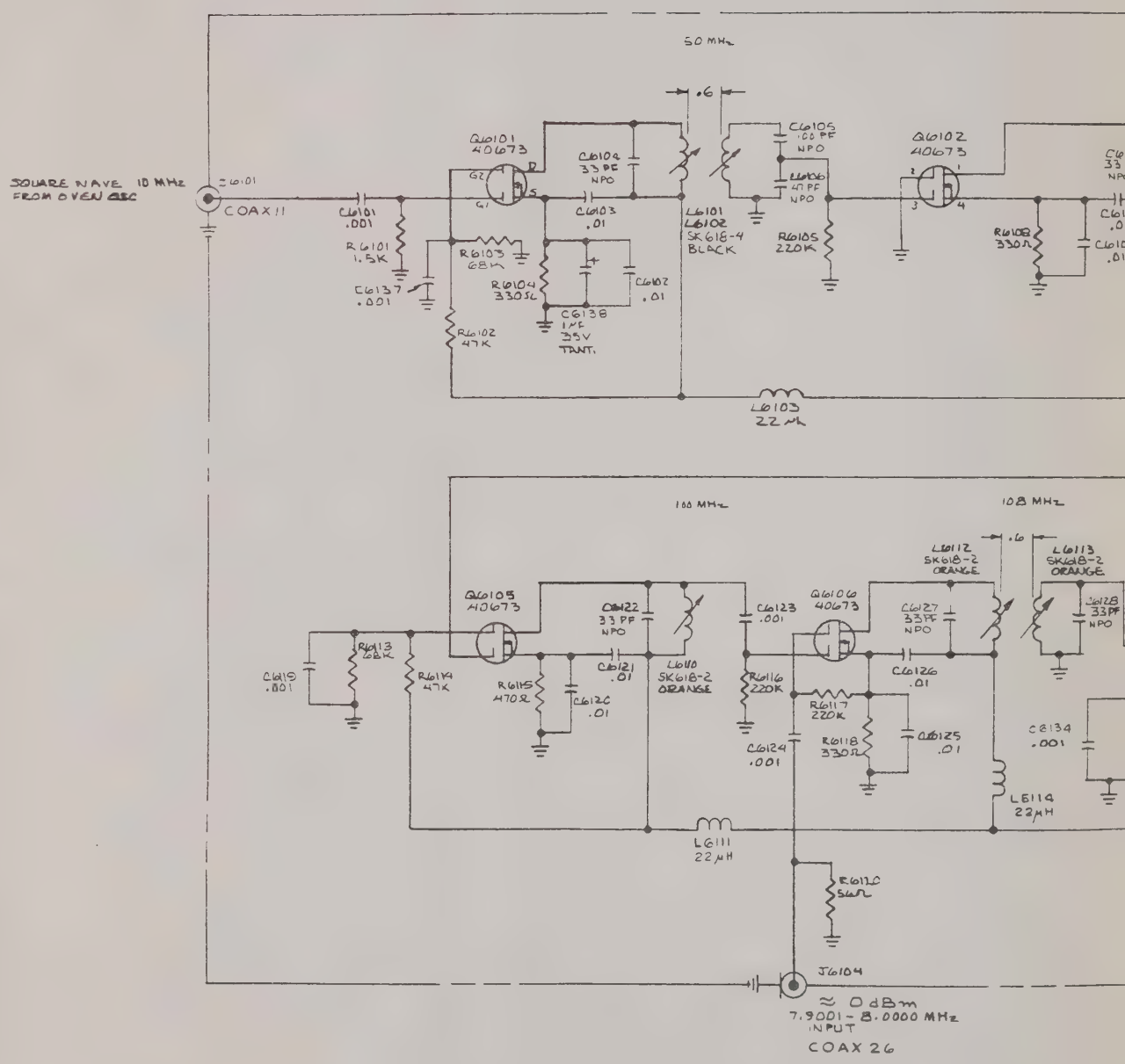

NOTE:

1. LAST US
R 6125
C 6138
L 6118

DATE	REV	CHANGE	APP'D
9/14/75	A	INCORPORATED ECN #65 SSD DLP	MO
3-6-76	B	INCORP ECN # 1154 GB. #30	MO
7/20/77	C	INCORP. ECN # 1911 & 1959	MO
12/29/77	D	INCORPORATED ECN # 2002 JNV	MO
8/2/78	E	INCORP. ECN # 2388 & 2403 LC	MO
2-17-79	F	INC ECN 2709 JJO	WW
4-26-79	G	INC ECN 2951 JJT	WW

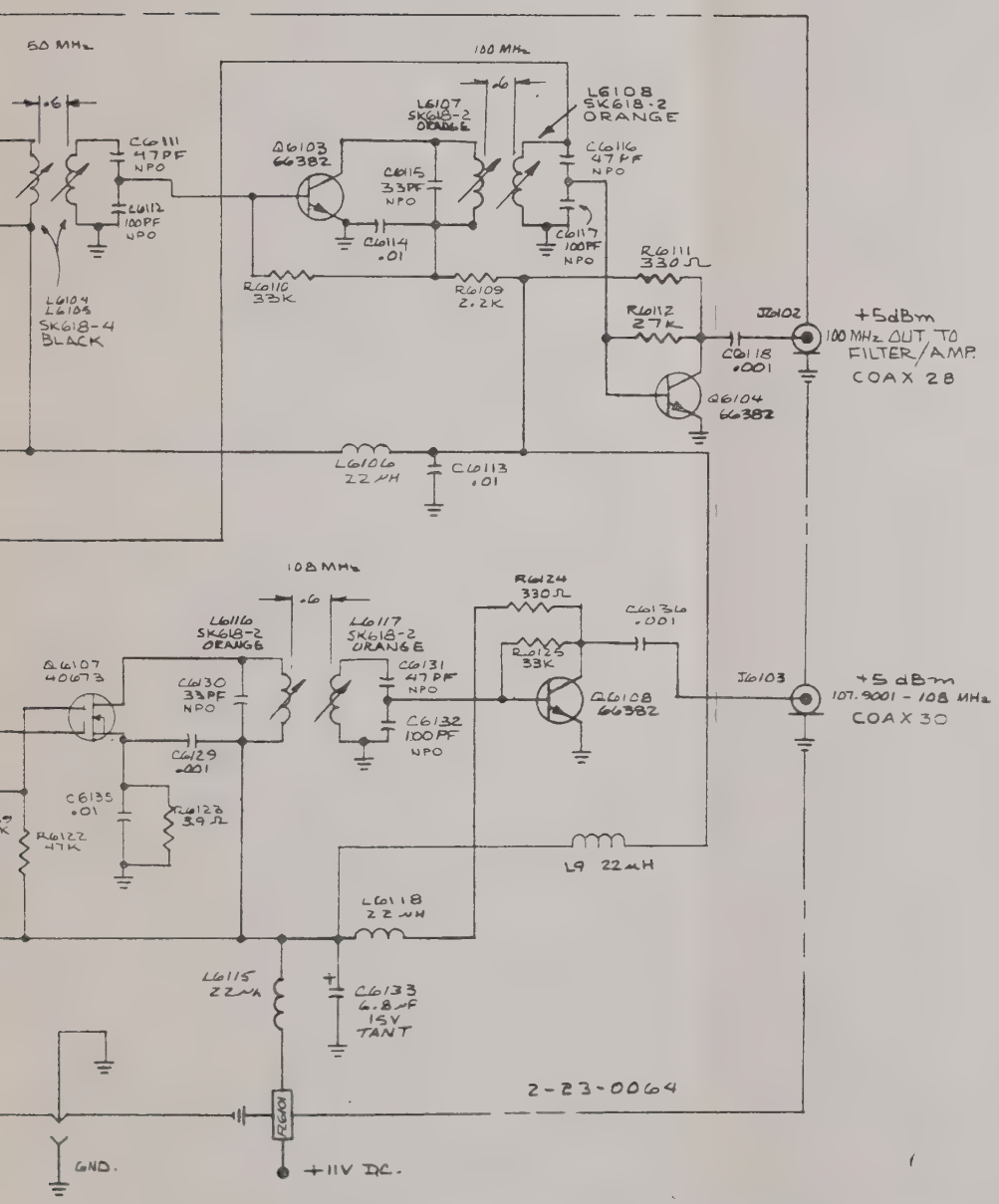

NUMBERS:

NEXT ASS'Y	QTY	MODEL	ITEM	REQ'D	PART NO	DESCRIPTION
23-0095	—	AM-FM-[illegible]	—	—	23-0061	SCHEMATIC

APPLICATION — LIST OF MATERIALS

TOLERANCES: UNLESS OTHERWISE SPECIFIED ALL DIMENSIONS APPLY AFTER FINISH. DECIMALS .XX = ± .010 .XXX = ± .005. ANGLES ± 1/2°. FRACTIONS ± 1/64. SURFACE ROUGHNESS 125. REMOVE ALL BURRS.

DRAWN 2-26-79 — CHECKED 4-9-79 — APPROVED 12-9-75

INSTRUMENT FLIGHT RESEARCH CORPORATION
WICHITA, KANSAS

TITLE: 100 MHz MULT. & 108 MHz MIXER

MATERIAL — TREATMENT — FINISH

SIZE C — PART NUMBER 3-23-0061 — REV G

SCALE — WEIGHT — SHEET 1 OF 1

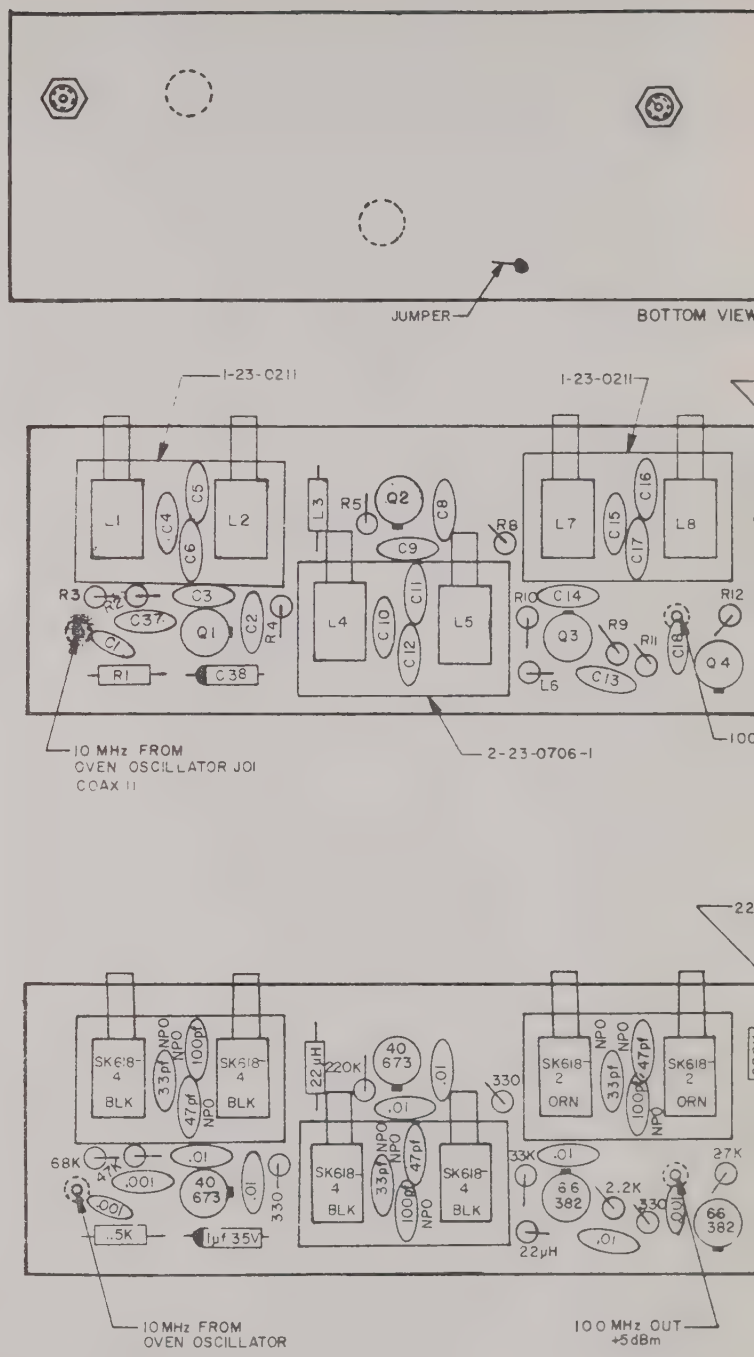

NOTE:

1. ALL RESISTORS ARE 1/4 W, 10% TOL. EXCEPT AS NOTED.
2. ALL CAPACITORS ARE IN µf EXCEPT AS NOTED.
3. COMPONENT LEADS MAY EXTEND .04 TO .06 BEYOND BOTTOM OF BOARD AFTER SOLDERING.
4. MAXIM HEIGHT OF COMPONENTS TO BE .45 FROM COMPONENT SIDE OF BOARD.
5. ALL COMPONENT CALL OUTS ARE PREFIXED WITH 61 i.e. C6102, R6102

-77	C	ORIGINAL RELEASE	
1-19-78	J-1	INC ECN 2709	
4-13-78	J-2	INC ECN 2951	
8-2-78	K	INC. ECN 2954 & 2999 TenEyck	

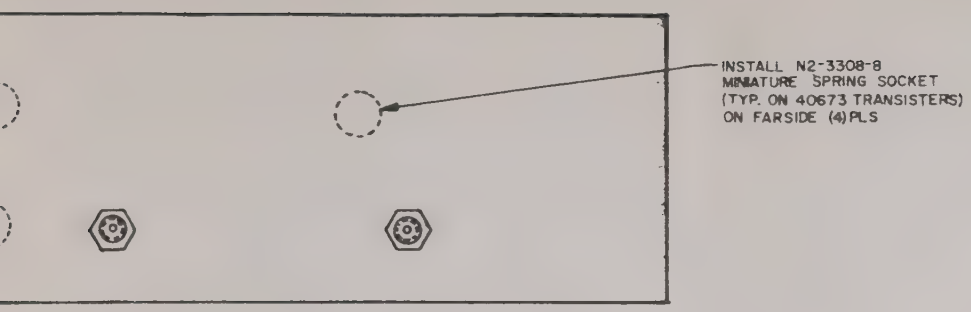

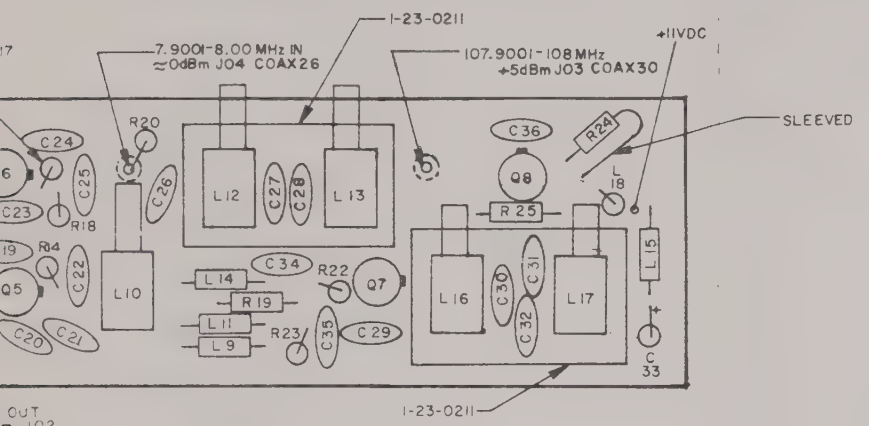

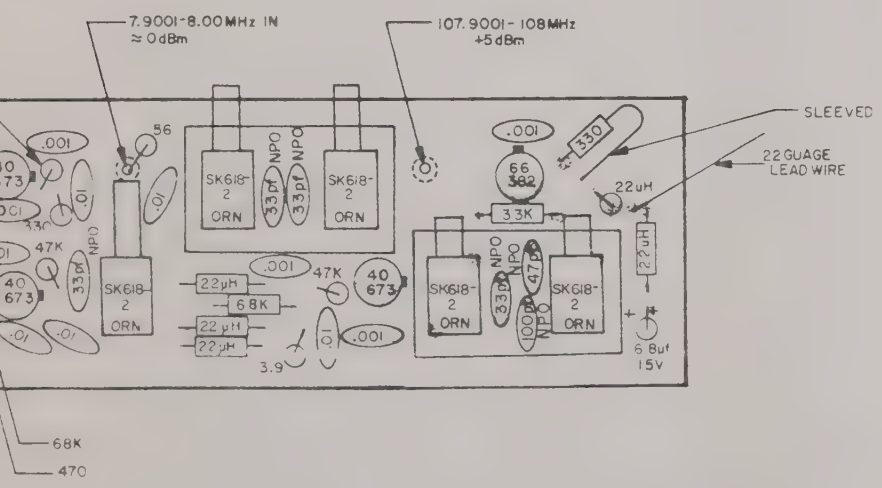

P.C. BOARD 2-23-0064
SCHEMATIC 3-23-0061

ITEM	REQ'D	PART NO	DESCRIPTION
			2 MATERIALS

TOLERANCES
UNLESS OTHERWISE SPECIFIED
ALL DIMENSIONS APPLY AFTER FINISH
DECIMALS .XX = ± .010 .XXX = ± .005
ANGLES ± 1/2°
FRACTIONS ± 1/64
SURFACE ROUGHNESS 125
REMOVE ALL BURRS

DRAWN TENEYCK 9-14-77
CHECKED DATE
APPROVED DATE

- IFR INC -
WICHITA KANSAS

TITLE
100MHz MULTIPLIER AND
108MHz MIXER
PC BOARD ASSEMBLY

MATERIAL
FINISH

SIZE C | PART NUMBER 3-23-0095 | REV K
SCALE 2:1 | WEIGHT | SHEET 1 OF 1

PARENT	QTY	MODEL
2-23-0215	1	FRAME 10002A
NEXT ASSY	QTY	APPLICATION
2-23-0219	1	

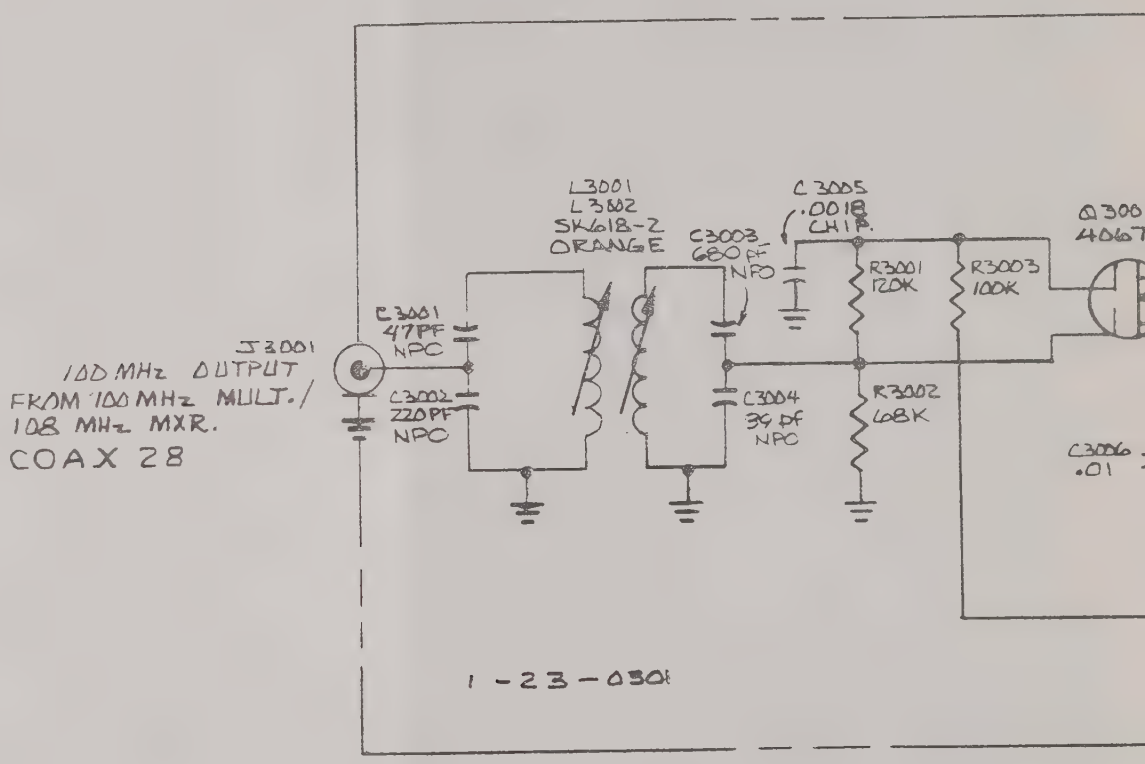
J3001
100 MHz OUTPUT
FROM 100 MHz MULT./
108 MHz MXR.
COAX 28
C3001
47PF
NPO
C3002
220PF
NPO
L3001
L3002
SK618-2
ORANGE
C3003
680 PF
NPO
C3004
39 PF
NPO
C3005
.0018
CHIP
R3001
120K
R3002
68K
R3003
100K
Q300
4067
C3006
.01
1-23-0301

DATE	REV	CHANGE	APP'D
2/12/75	A	INCORPORATED ECN #291 SGD	MD
9-5-75	B	INCORPORATED ECN #983 SGD	MD
3/29/77	C	INCORP. ECN #1958 NV	MD
1-18-78	D	INC ECN 2709 JBT	MD

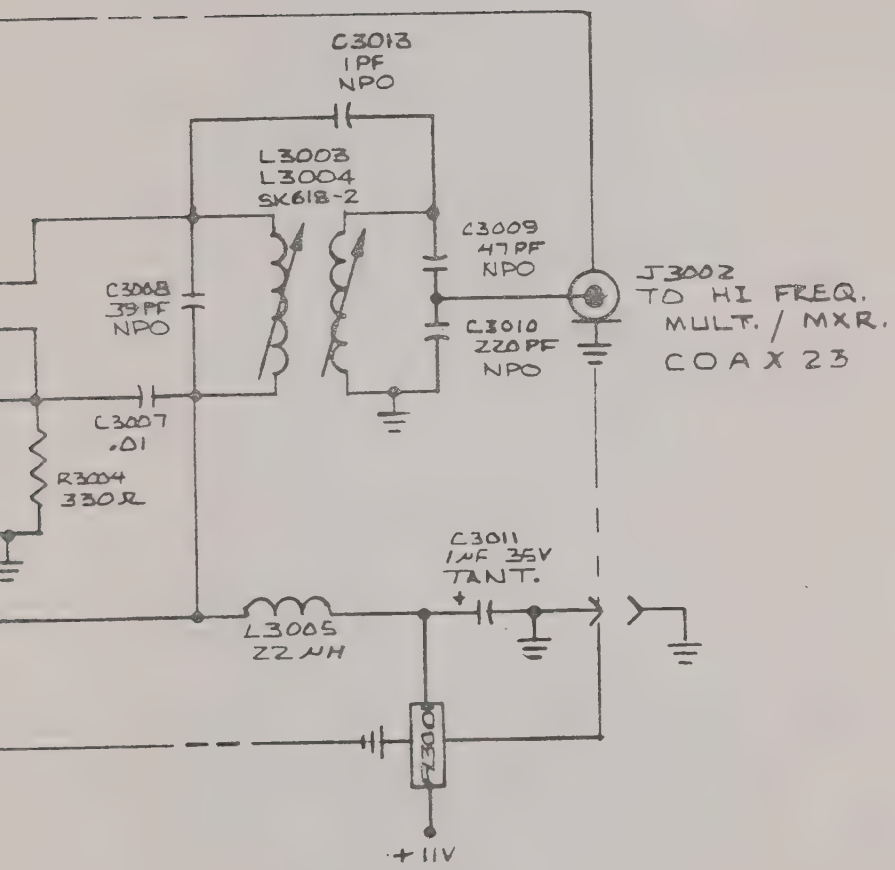

NEXT ASS'Y	QT'Y	MODEL	ITEM	REQ'D	PART NO.	DESCRIPTION
23-0303	—	FM-1000	1	1	09-0300	SCHEMATIC

APPLICATION — LIST OF MATERIALS

TOLERANCES
UNLESS OTHERWISE SPECIFIED
ALL DIMENSIONS APPLY AFTER FINISH
DECIMALS: ± .005
ANGLES: ± 1/2°
FRACTIONS: ± 1/64
SURFACE ROUGHNESS 125
REMOVE ALL BURRS

DRAWN DATE 7-25-74
CHECKED DATE 7-25-74
APPROVED DATE 2-12-75

INSTRUMENT FLIGHT RESEARCH CORPORATION
WICHITA, KANSAS

TITLE
100 MHz FILTER
SCHEMATIC
FM-1000

MATERIAL —
TREATMENT —
FINISH —

SIZE B — PART NUMBER Z-23-0300 — REV D
SCALE — WEIGHT —
SHEET 1 OF 1

23-0301
RTWORK

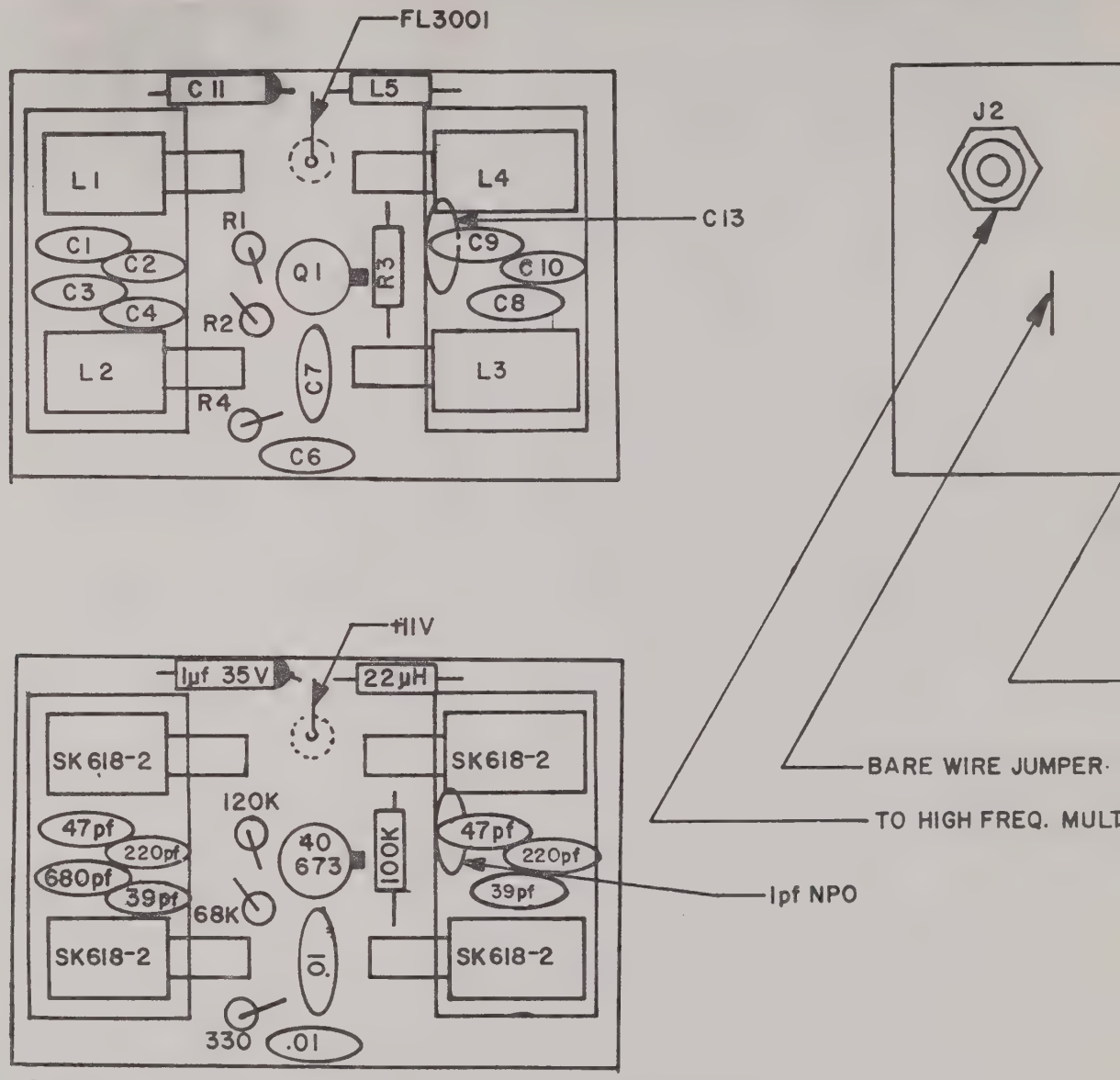

PC BD.: 1-23-0301
SCHEMATIC: 2-23-0300

NOTES:

1. ALL RESISTORS ARE 1/4 W., 10% TOLERANCE EXCEPT AS NOTED.
2. ALL CAPACITOR VALUES ARE IN µF EXCEPT AS NOTED, AND ARE NPO.
3. COMPONENT LEADS MAY EXTEND .04 TO .06 BEYOND BOTTOM OF BOARD AFTER SOLDERING.
4. MAXIMUM HEIGHT OF COMPONENTS TO BE .35 FROM COMPONENT SIDE OF BOARD.
5. PLACE CHIP CAPACITORS ON BACK SIDE OF BOARD.
6. ALL COMPONENT DESIGNATORS HAVE 300 PREFIX; i.e. R3001, Q3001, etc.

DATE	REV	CHANGE	APP'D
8-22-77	D	ORIGINAL RELEASE TJT	
1-18-78	G	INC ECN 2709 JAJ	WW

TTOM VIEW

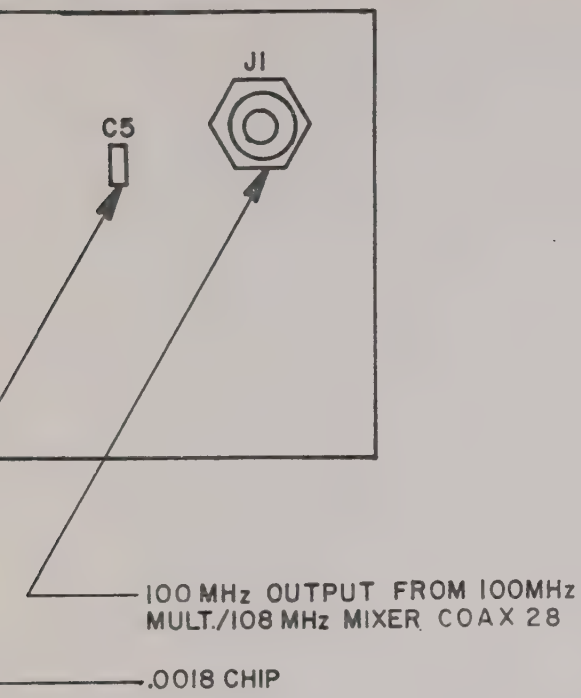

MIXER COAX 23

NEXT ASS'Y	QT'Y	MODEL	ITEM	REQ'D	PART NO.	DESCRIPTION
23-0591	1	FM/AM1000S				
23-0591	1	FM/AM1000A				

APPLICATION — LIST OF MATERIALS

TOLERANCES
UNLESS OTHERWISE SPECIFIED
ALL DIMENSIONS APPLY AFTER FINISH
DECIMALS: ± .005
ANGLES: ± 1/2°
FRACTIONS: ± 1/64
SURFACE ROUGHNESS 125
REMOVE ALL BURRS

DRAWN TJT DATE 8/22/77
CHECKED DATE
APPROVED DATE

INSTRUMENT FLIGHT RESEARCH CORPORATION
WICHITA, KANSAS

TITLE
100 MHz FILTER PC
BOARD ASSEMBLY

MATERIAL
TREATMENT
FINISH

SIZE B | PART NUMBER 2-23-0303 | REV G
SCALE 2:1 | WEIGHT — | SHEET 1 OF 1

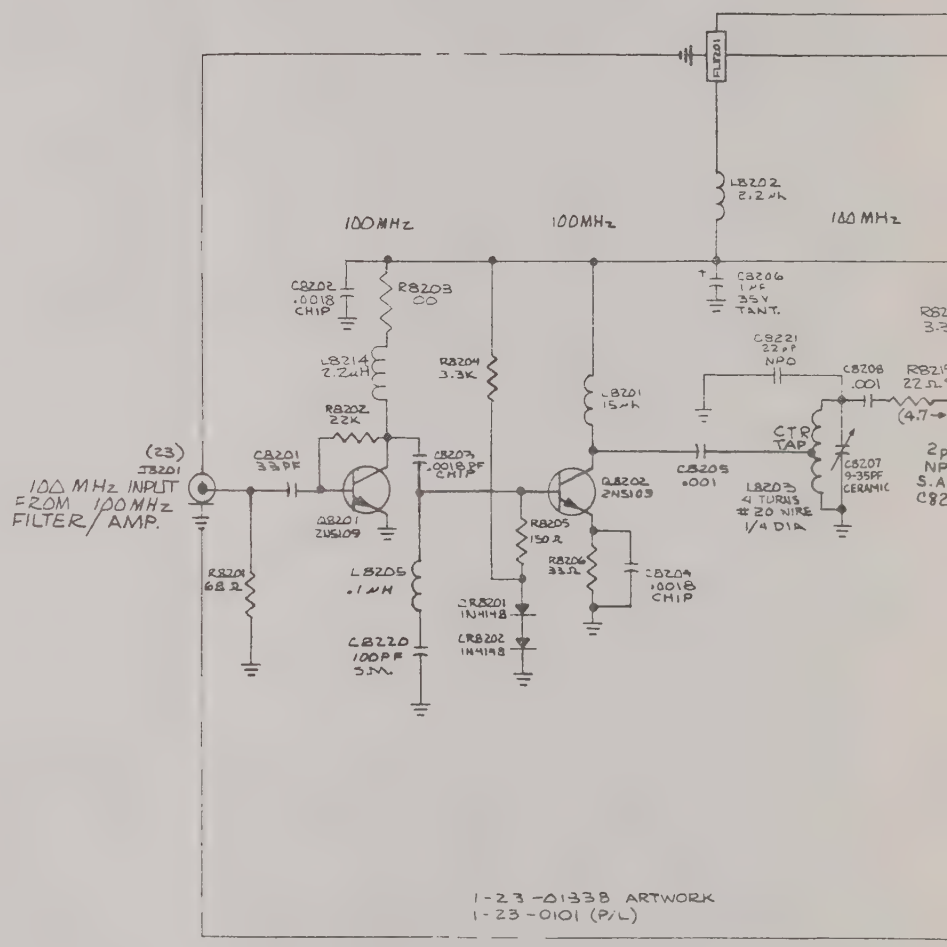

NOTE:
ALL UN MARKED
DIODES ARE MA47047

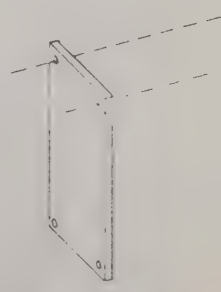

DATE	REV	CHANGE	APPD
11-13-74	A	INC. ECN. # 1	MD
5-15-75	B	INC ECN 568 DLP/GLD	MW
7-2-75	C	INCORP ECN # 856	DLP
9-8-75	D	INCORP ECN # 944	AW
12-15-76	E	INCORP ECN # 1180	MD
2-13-76	F	INCORP ECN # 1340	MD
4-13-76	G	INCORP ECN # 1423	MW
5-26-76	H	INCORP. ECN # 1470	MD
7/18/77	J	INCORPORATED ECN # 1995	AD
1-8-78	K	INC. ECN 2620	

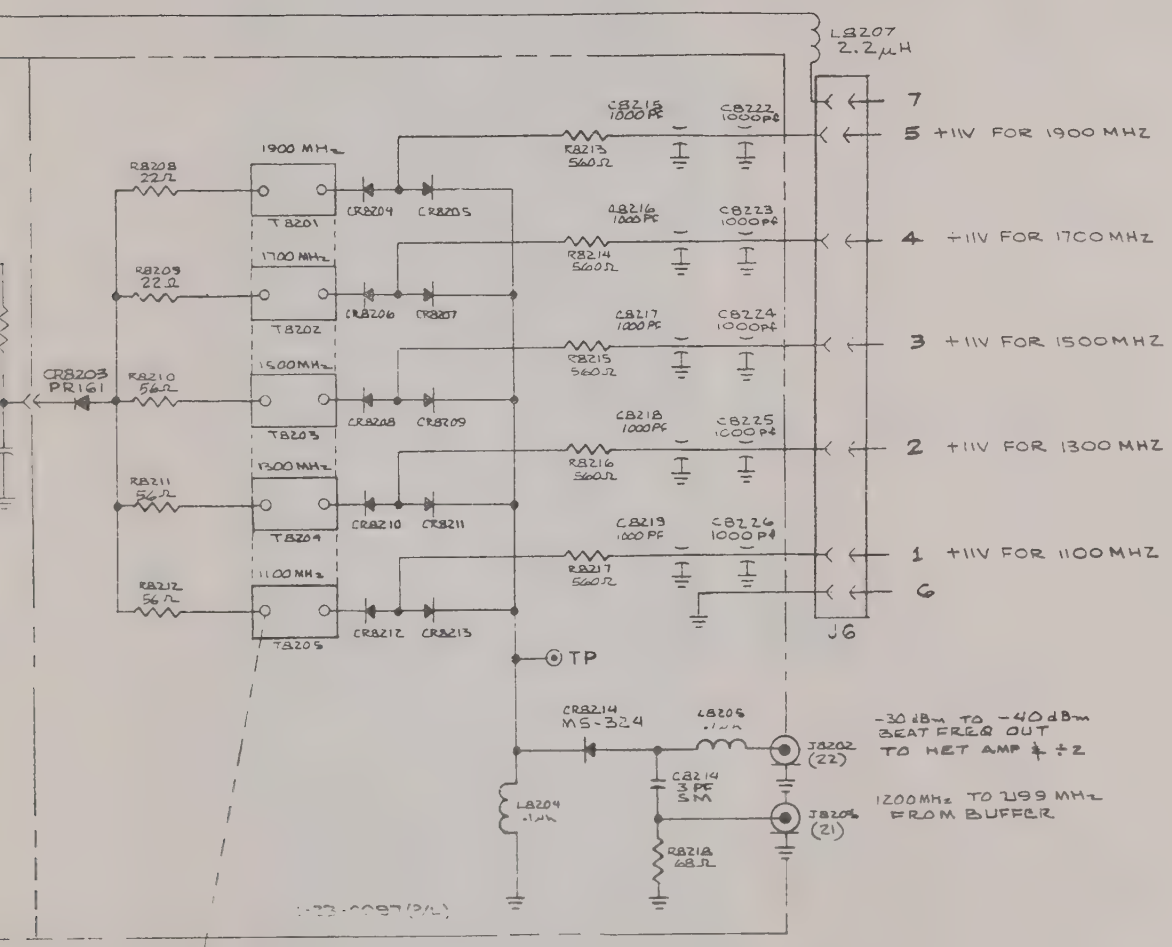

LAST USED R8219
C8221
CR8214
T8205
Q8202
L8205

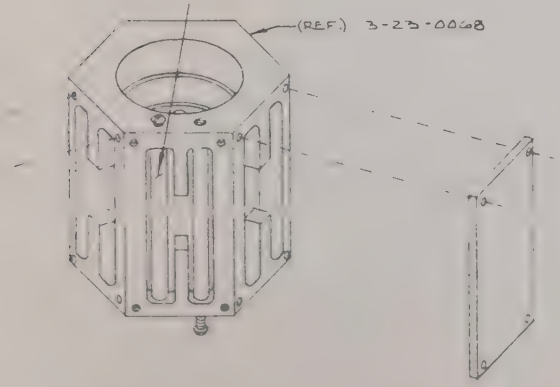

P/LIST 1-23-0097

23-0097	1	FM/AM 1000	—	—	23-0082	SCHEMATIC
NEXT ASSY	QTY	MODEL	ITEM	REQ'D	PART NO	DESCRIPTION

APPLICATION — LIST OF MATERIALS

TOLERANCES
UNLESS OTHERWISE SPECIFIED
ALL DIMENSIONS APPLY AFTER FINISH
DECIMALS .XX = ± .010 .XXX = ± .005
ANGLES ± 1/2°
FRACTIONS ± 1/64
SURFACE ROUGHNESS 125
REMOVE ALL BURRS

DRAWN 3-14-74
CHECKED
APPROVED

INSTRUMENT FLIGHT RESEARCH CORPORATION
WICHITA, KANSAS

TITLE
HI - FREQ.
MULT. / MIXER
(SCHEMATIC)

MATERIAL —
TREATMENT —
FINISH —

SIZE C — PART NUMBER 3-23-0082 — REV K
SCALE — WEIGHT — SHEET 1 OF 1

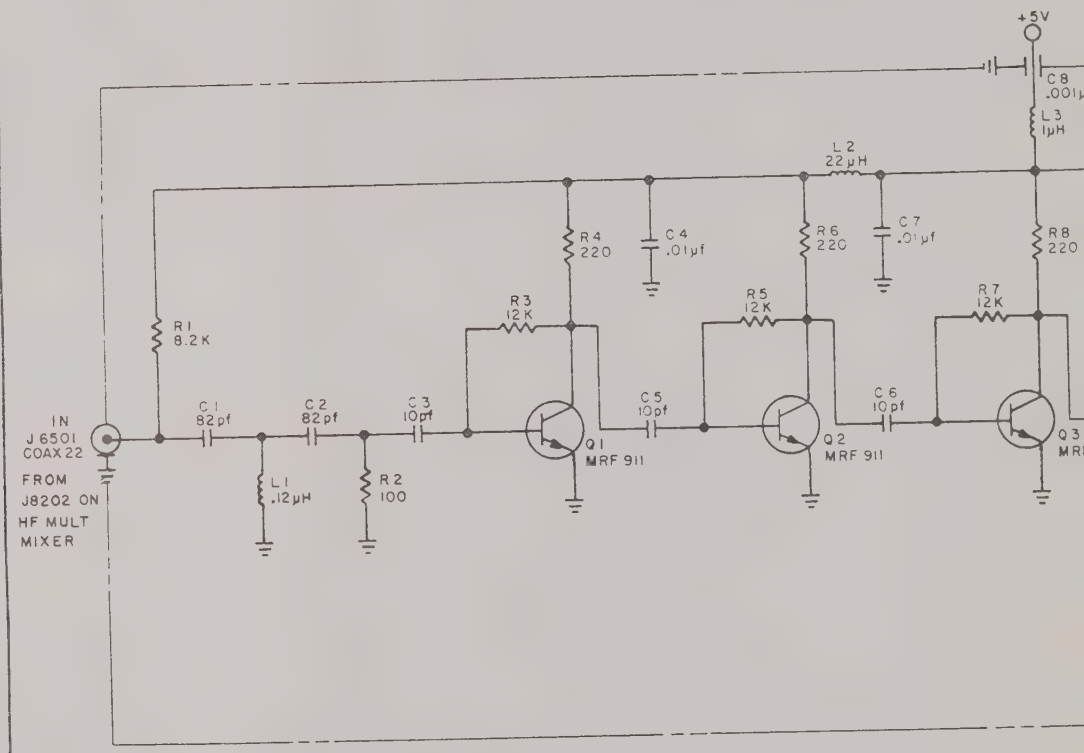
+5V
C8
.001μ
L3
1μH
L2
22μH
R4
220
C4
.01μf
R6
220
C7
.01μf
R8
220
R3
12K
R5
12K
R7
12K
R1
8.2K
IN
J 6501
COAX 22
FROM
J8202 ON
HF MULT
MIXER
C1
82pf
C2
82pf
C3
10pf
C5
10pf
C6
10pf
L1
.12μH
R2
100
Q1
MRF 911
Q2
MRF 911
Q3

DATE	REV	CHANGE	APP'D
9/2/69	A	INC ECN 2949 JAJ	WW
4/13/70	A	INC ECN 2949 JGF	WW

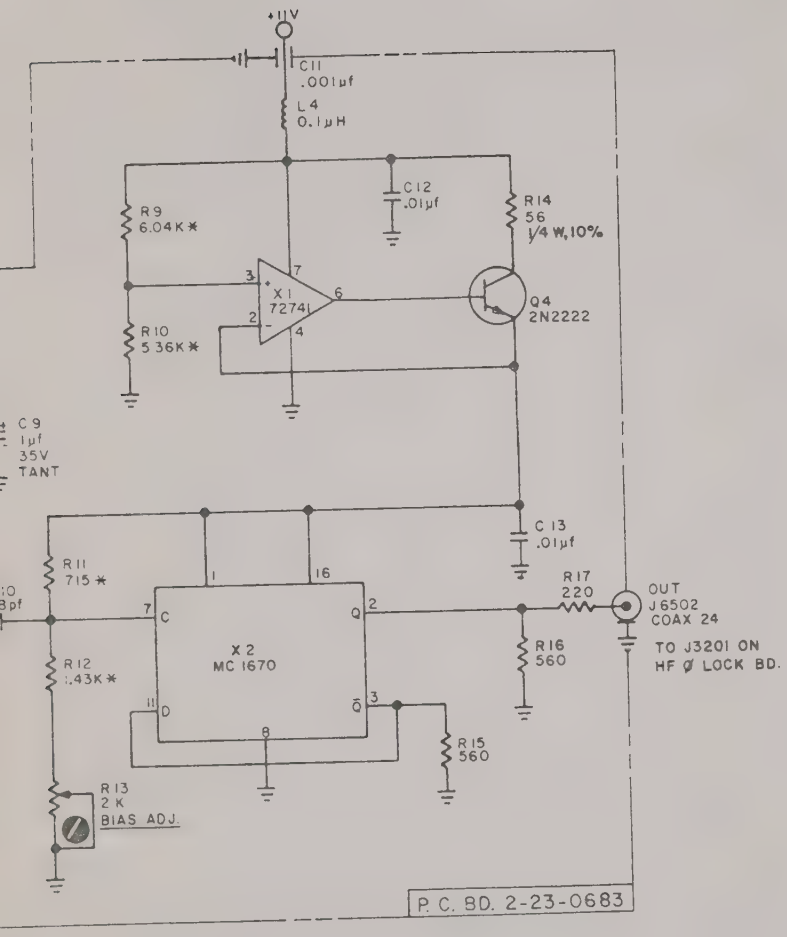

EFFECTIVE: FM/AM1000A S/N 1170 & ON

3-23-0685 HET. AMP. ÷2 PRESCALER

HET. AMP.
÷2 PRESCALER

C 3-23-0685 A

SHEET 1 OF 1

NOTES

1. ALL RES. ARE 1/8W, 10% TOL. EXCEPT AS NOTED
2. THOSE CAPACITORS CALLED OUT IN PF ARE NPOS
3. "*" DENOTES 1/4W, 1% TOL. RES.

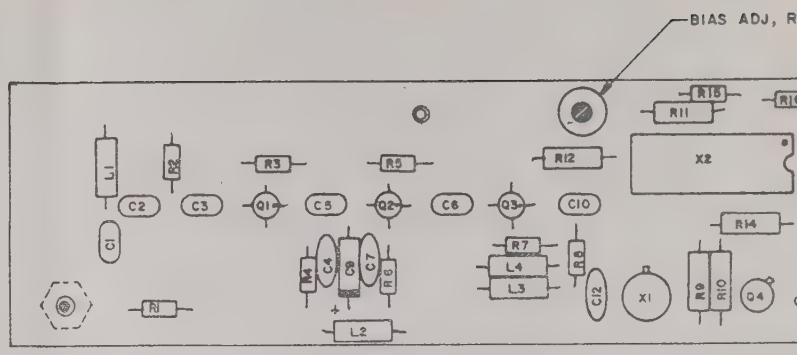

REF DWG:

PC BOARD 2-23-0683

SCHEMATIC 3-23-0685

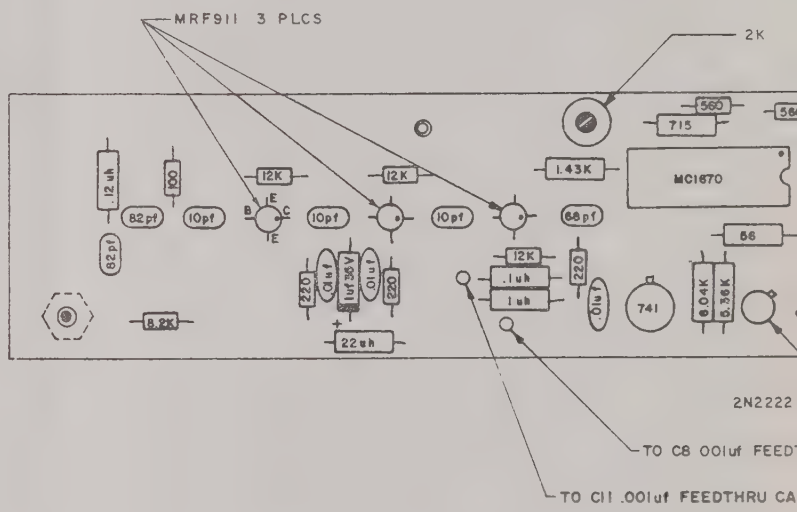

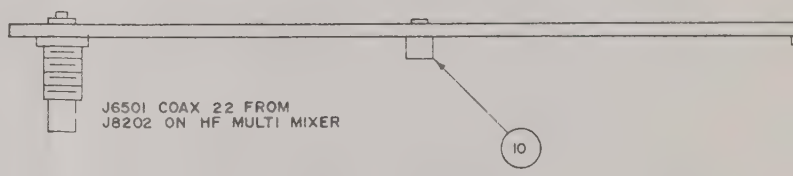

NOTES:

1 C1 – C3,5,6,10 ARE NPO CAPS

2 R1 THRU R8, R15 THRU R17 ARE 1/8W, 10%

3. R14 IS 1/4W, 10%

4. R9,10,11,12 ARE 1/4W, 1%

5. COMPONENT LEADS MAY EXTEND 04-.06 BEYOND BOTTOM OF BOARD AFTER SOLDE

6 MAXIMUM HEIGHT OF COMPONENTS TO BE .35 FROM COMPONENT SIDE OF BOARD.

DATE	REV	CHANGE	APP'D

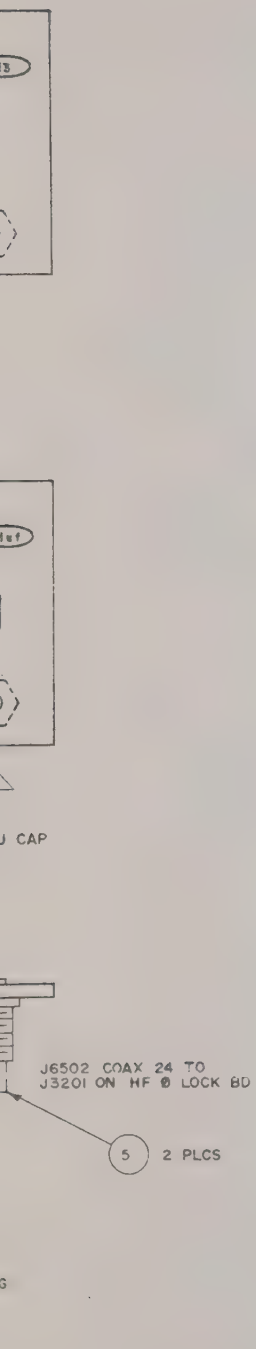

EFFECTIVE: 1000A S/N 1170 & ON

ITEM	REQ'D	PART NO.	DESCRIPTION
12			
11			
10	1	350-2188-09-07	STANDOFF "CAMBION"/EQUIV
9			
8	A/R	AWG 26	SLEEVING
7	A/R	AWG 26	BUSS WIRE
6			
5	2	17-0204-000	CONNECTOR "AEP"/EQUIV
4			
3	REF	3-23-0685	SCHEMATIC
2	1	2-23-0683	PC BOARD
1	1	1-23-0684	ASSY P/L

LIST OF MATERIALS

23-0225	1	1000A	
NEXT ASSY	QTY	MODEL	APPLICATION

TOLERANCES
UNLESS OTHERWISE SPECIFIED
ALL DIMENSIONS APPLY AFTER FINISH
DECIMALS .XX ± .010 .XXX ± .005
ANGLES ± 1/2°
FRACTIONS ± 1/64
SURFACE ROUGHNESS 125 ✓
REMOVE ALL BURRS

DRAWN Jim Kuo DATE 4-14-78
CHECKED DATE
APPROVED 4-27-78 DATE

-IFR INC-
WICHITA, KANSAS

TITLE
HET AMP ÷ 2 PRESCALER
PC ASSY

MATERIAL
FINISH

SIZE C | PART NUMBER 3-23-0684 | REV
SCALE 2 x 1 | WEIGHT | SHEET 1 OF 1

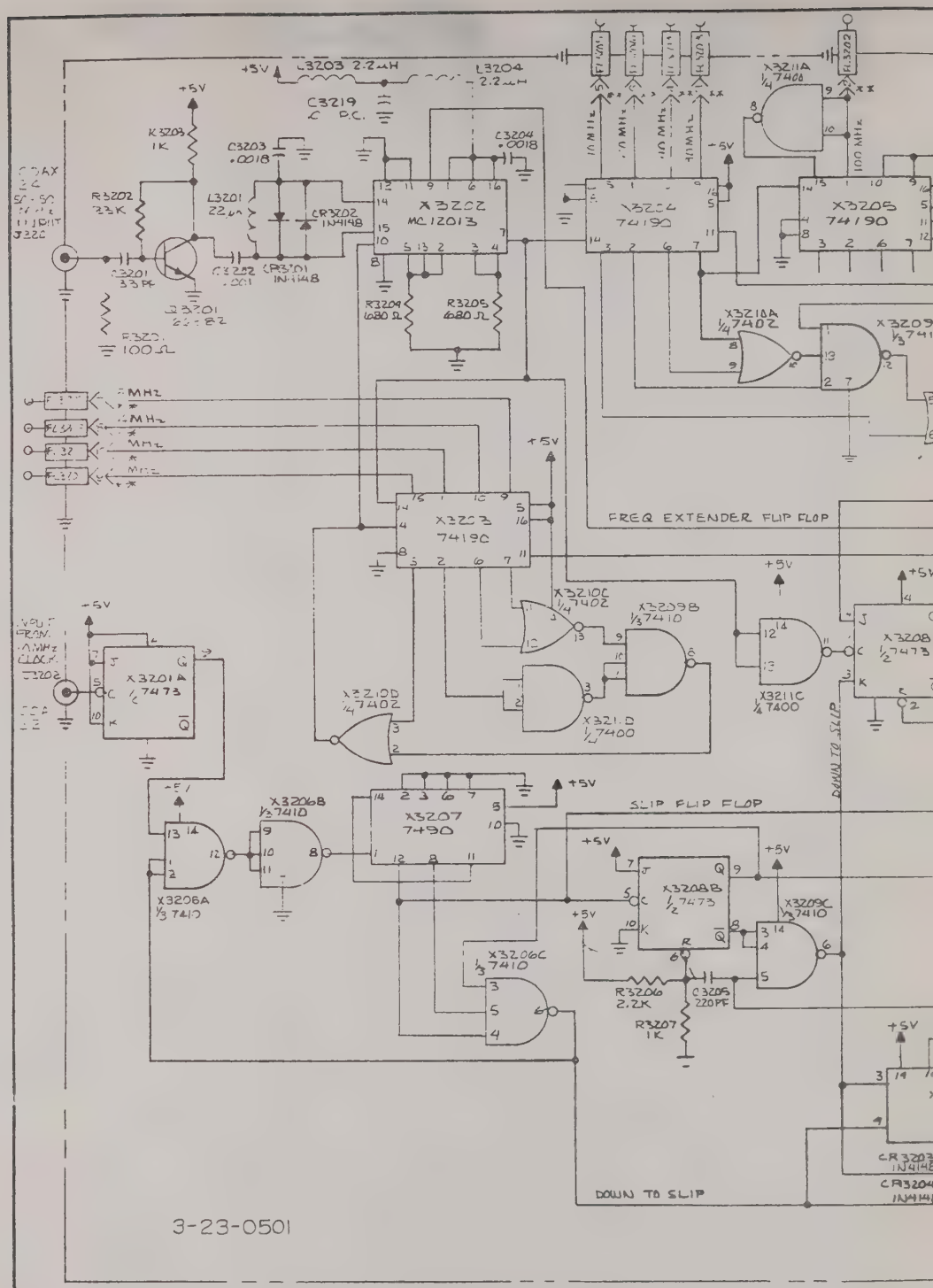

NOTE:

1. COMPONENTS MARKED * ARE 1%
2. CONNECTIONS MARKED ** REFER TO FM-AM 1000. FEED-THRU FILTERS APPEAR ON FM-AM 1000 ON
3. Q3209 (2N3231) WAS 2N5462 AND RESISTOR 23 WAS 6.8K ON UNITS PRIOR TO SN 537.

DATE	REV	CHANGE	APPD
5/7/75	A	INCORPORATED ECN #664	MD
4/7/76	B	INCORP. ECN # 1378	MD
4/27/76	C	INCORP. ECN # 1432	MD
9/09/77	D	INCORP ECN # 2000, 2005	MD
1/24/78	E	INCORP. ECN # 2279	MD
1-16-81	F	INC ECN 2709	WDD

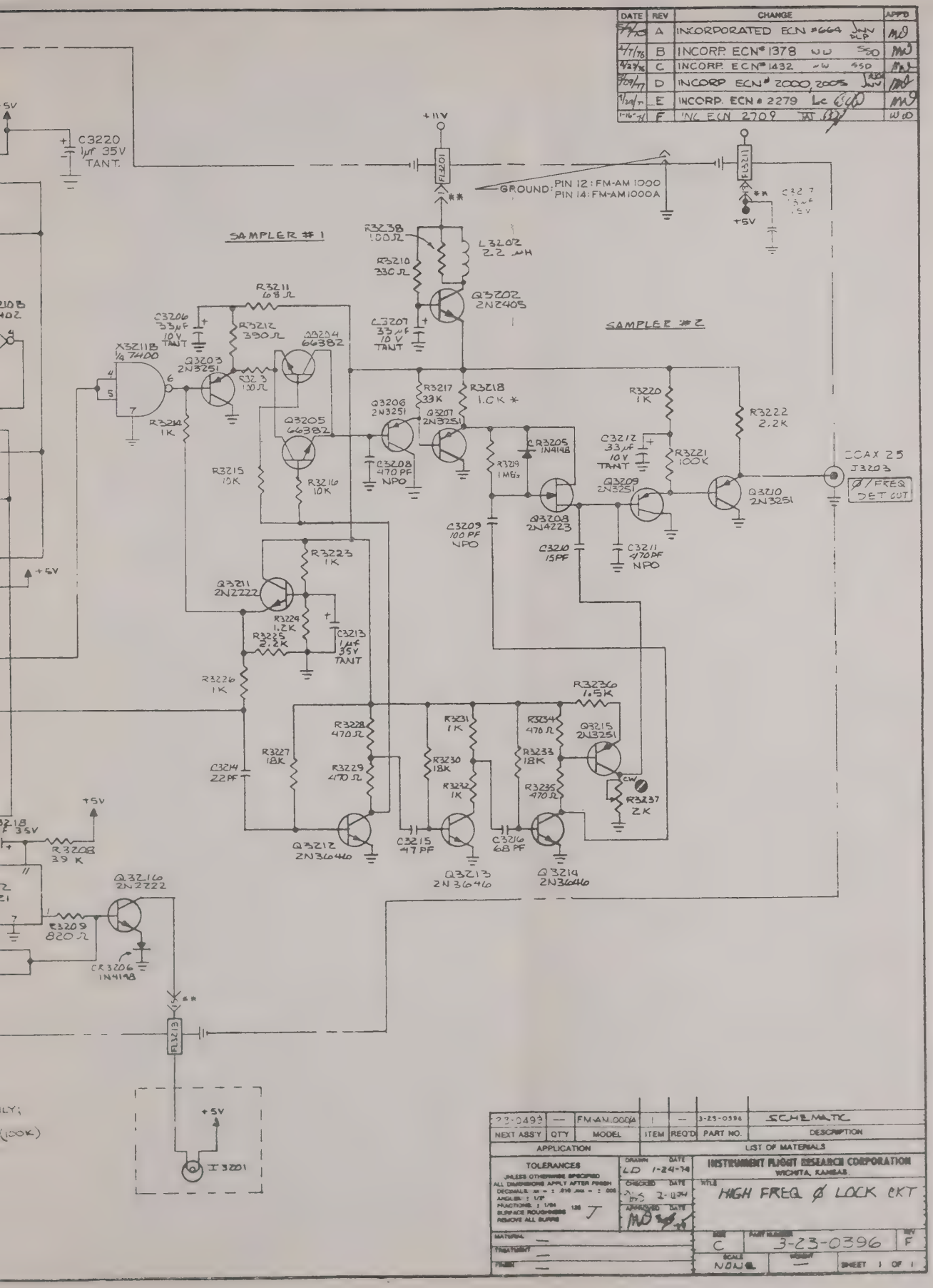

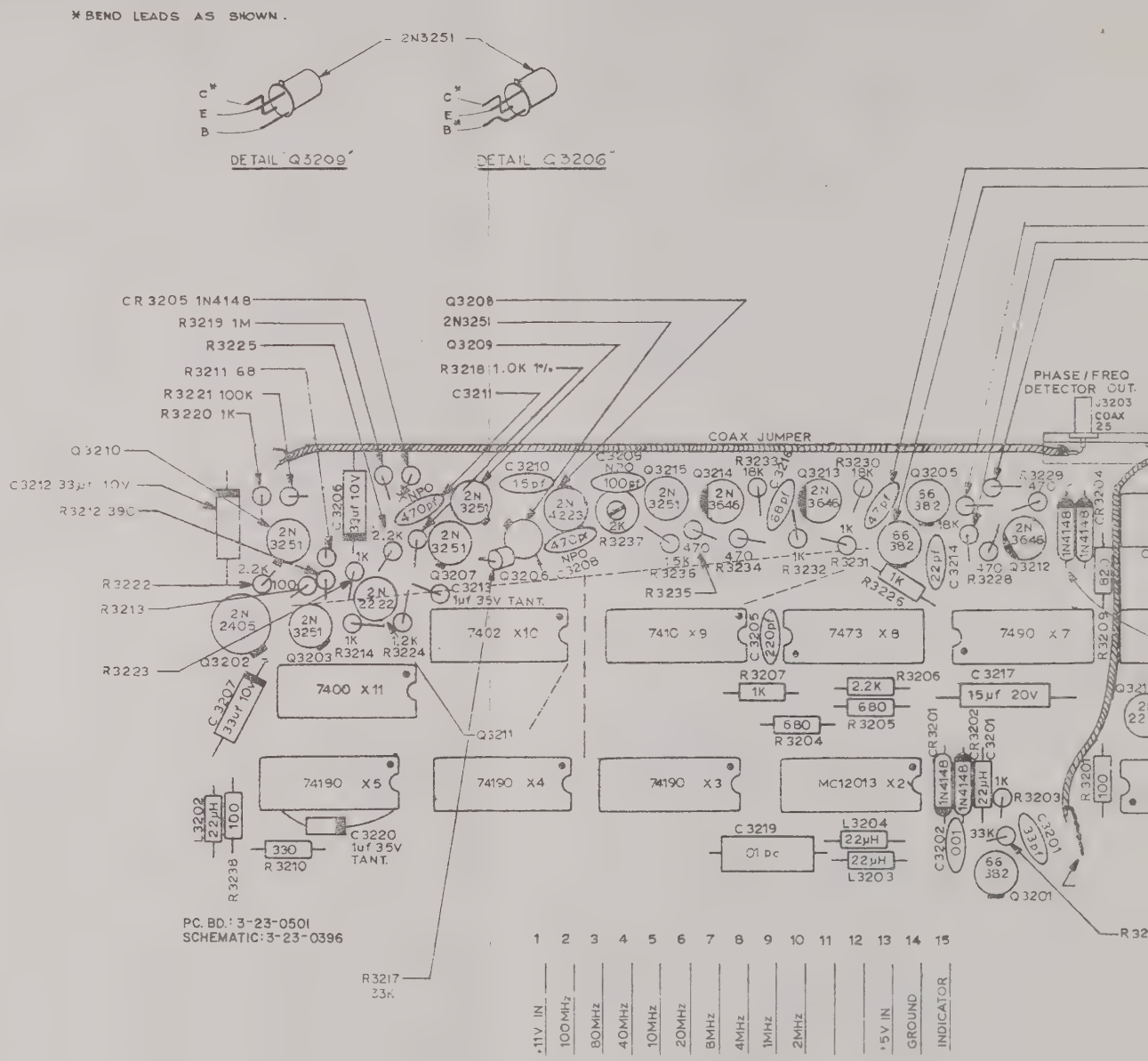

NOTES:

1. ALL RESISTORS ARE 1/4 W., 10% TOLERANCE EXCEPT AS NOTED
2. ALL CAPACITOR VALUES ARE IN µF EXCEPT AS NOTED.
3. COMPONENT LEADS MAY EXTEND .04 TO .06 BEYOND BOTTOM OF BOARD AFTER SOLDERING.
4. MAXIMUM HEIGHT OF COMPONENTS TO BE .35 FROM COMPONENT SIDE OF BOARD.

DATE	REV	CHANGE	APP'D
[illegible]	D	INCORP ECN # 2279 bc	[illegible]
[illegible]	D	[illegible]	

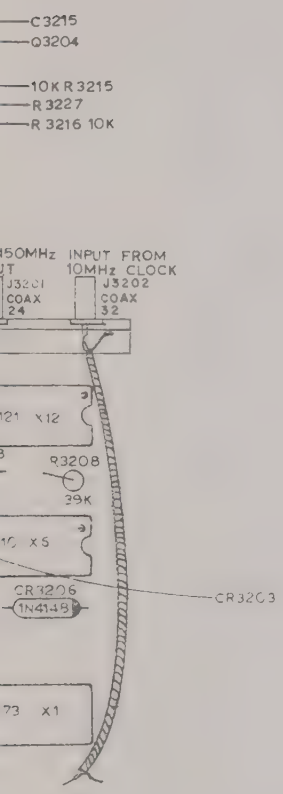

ITEM	REQ'D	PART NO	DESCRIPTION

LIST OF MATERIALS

TOLERANCES
UNLESS OTHERWISE SPECIFIED
ALL DIMENSIONS APPLY AFTER FINISH
DECIMALS .XX = ± .01 .XXX = ± .005
ANGLES ± 2°
FINAL TRIMS ± .64
SURFACE ROUGHNESS
REMOVE ALL BURRS

DRAWN TJT DATE 8/10/77
CHECKED DATE
ENGINEER DATE

-IFR INC-
WICHITA, KANSAS

TITLE
HIGH FREQUENCY Ø LOCK
PC BOARD ASSEMBLY

MATERIAL
FINISH

SIZE 3 PART NUMBER 3-23-0493
SCALE 2 WEIGHT SHEET 1 OF 1

FORM
PROJECT
MODEL
XT ASSY
APPLICATION
NEXT ASSY
USED ON

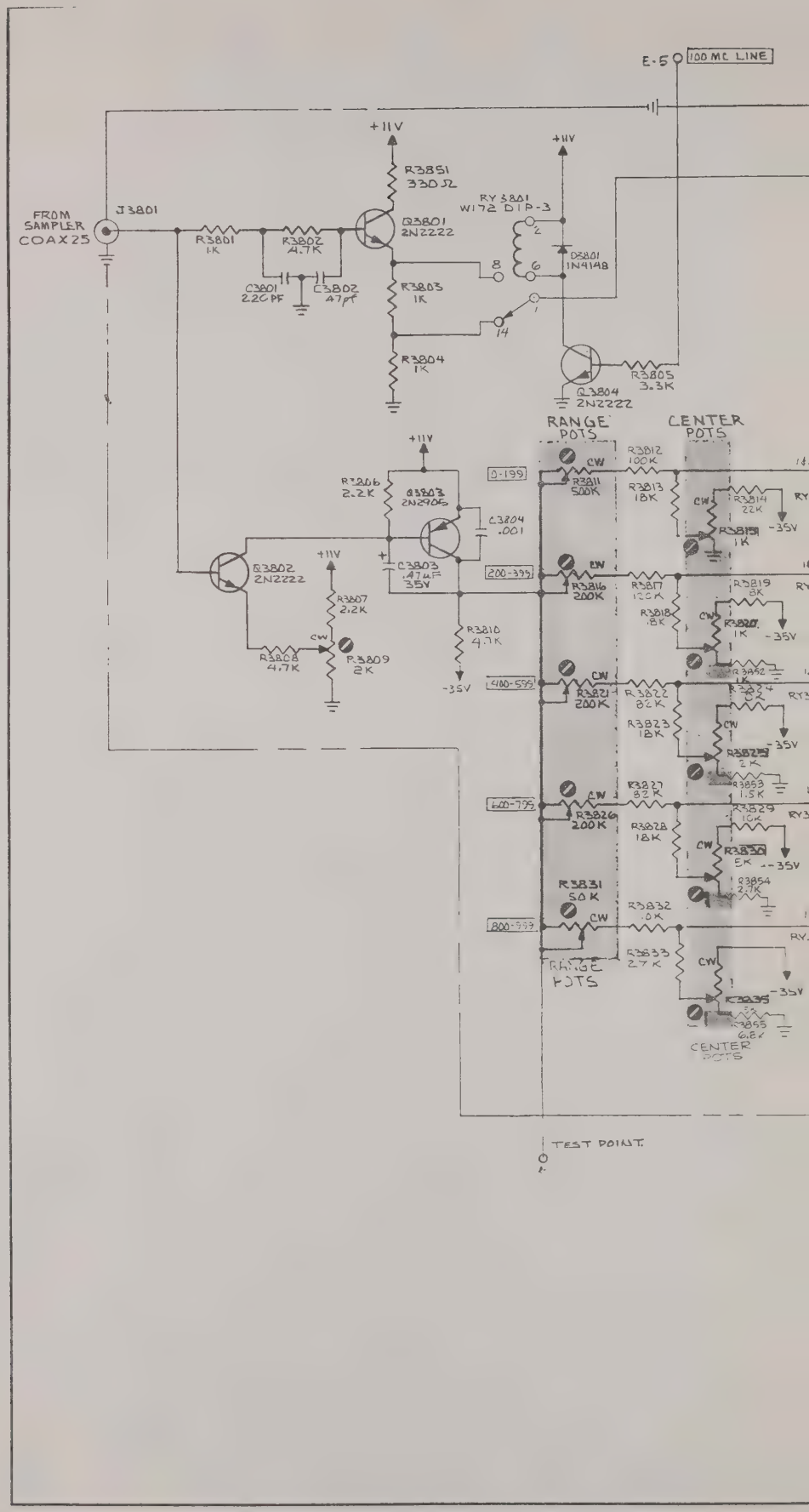
E-5
100 MC LINE
FROM SAMPLER COAX 25
J3801
R3801 1K
R3802 4.7K
C3801 220 PF
C3802 47pf
+11V
R3851 330Ω
Q3801 2N2222
R3803 1K
R3804 1K
RY 3801 W172 DIP-3
D3801 1N4148
Q3804 2N2222
R3805 3.3K
Q3802 2N2222
R3806 2.2K
Q3803 2N2906
C3804 .001
C3803 .47μF 35V
R3807 2.2K
R3808 4.7K
P3809 2K
R3810 4.7K
-35V
RANGE POTS
CENTER POTS
0-199
200-399
400-599
600-799
800-999
R3811 500K
R3816 200K
R3821 200K
R3826 200K
R3831 50K
R3812 100K
R3813 18K
R3814 22K
R3815 1K
R3817 120K
R3818 18K
R3819 8K
R3820 1K
R3822 82K
R3823 18K
R3824 82
R3825 2K
R3852 1K
R3853 1.5K
R3827 82K
R3828 18K
R3829 10K
R3830 5K
R3854 2.7K
R3832 10K
R3833 27K
R3835
R3855 6.8K
CW
TEST POINT

DATE	REV	CHANGE	
5/14/5	A	INC ECN 633	
6/12/5	B	INC ECN 800	
10-17-75	C	INCORP ECN #1000	
12-2-75	D	INCORP ECN #1145	
4-13-76	E	INC. ECN #1424 & 1385	
7-22-76	F	INC ECN #1569 RKK	
3/9/77	G	INCORP ECN #2012, 1991	
5/4/77	H	INC ECN #2048 T.T	
2-20-77	J	INC ECN 2647	
1-17-78	K	INC ECN 2709	

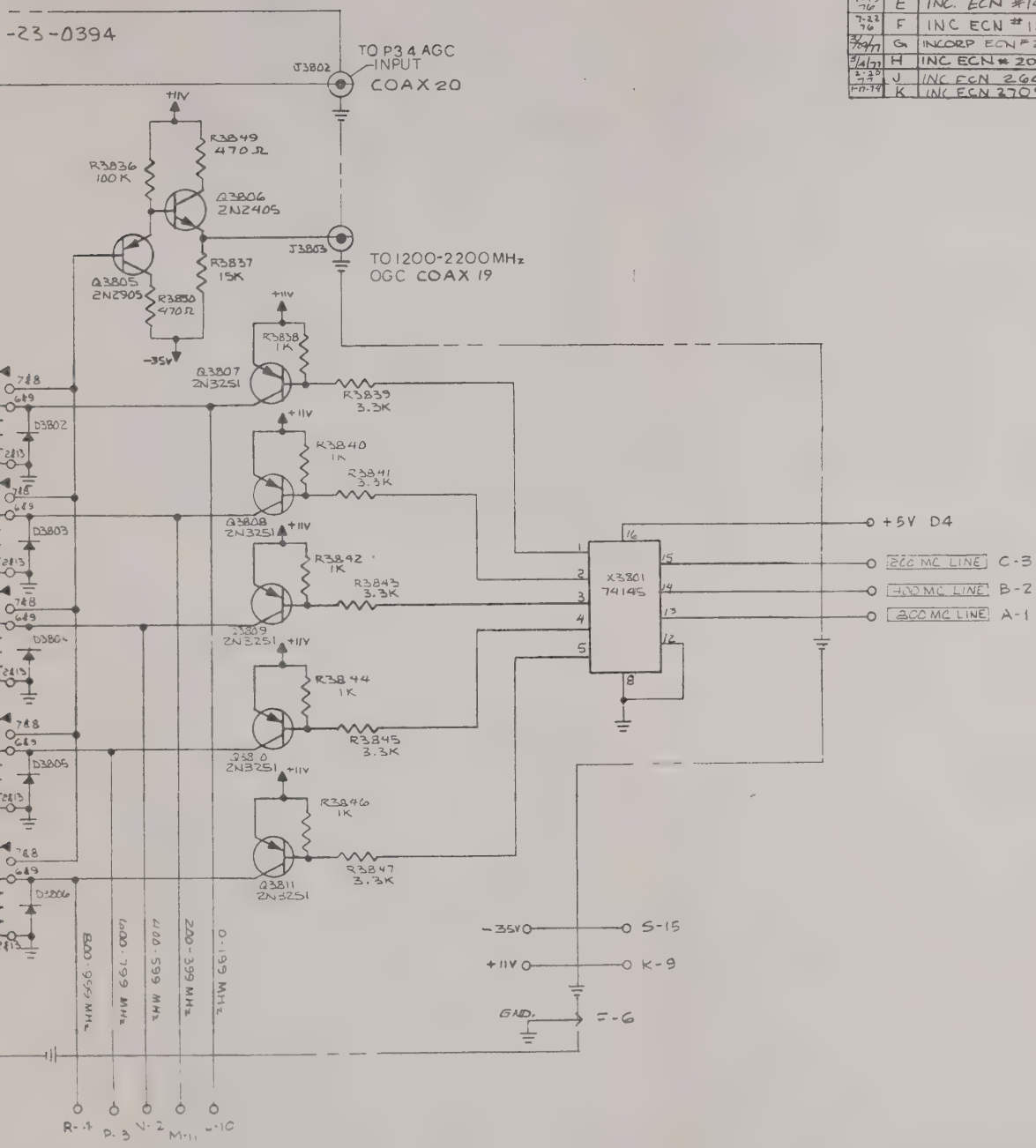

NOTE:
1. ALL UNMARKED RELAYS ARE W117 DIP-3
2. ALL UNMARKED DIODES ARE IN4148

ARTWORK 2-23-0041B
PARTS LIST -23-0050
ARTWORK 2-23-0394
PARTS LIST 2-23-04

NEXT ASS'Y	QTY	MODEL	ITEM	REQ'D	PART NO	DESCRIPTION
23-0423	1	FM/AM-1000	—	—	23-0048	

APPLICATION — LIST OF MATERIALS

TOLERANCES
UNLESS OTHERWISE SPECIFIED
ALL DIMENSIONS APPLY AFTER FINISH
DECIMALS .XX = ± .010 .XXX = ± .005
ANGLES ± 2°
FRACTIONS 64
SURFACE ROUGHNESS 125
REMOVE ALL BURRS

DRAWN — DATE 30 '74
CHECKED — DATE
APPROVED — DATE 5-15-75

MATERIAL
TREATMENT
FINISH

INSTRUMENT FLIGHT RESEARCH CORPORATION
WICHITA KANSAS

TITLE FM-1000

SIZE 3 | PART NUMBER 2-23-0048 | REV
SCALE | WEIGHT | SHEET

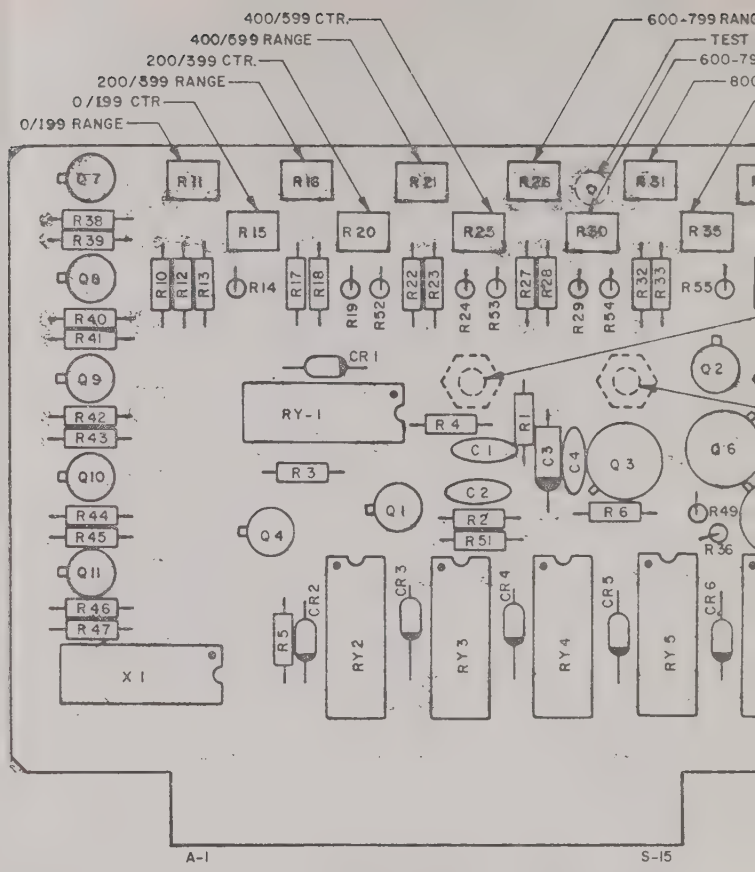
400/599 CTR.
400/599 RANGE
200/399 CTR.
200/399 RANGE
0/199 CTR
0/199 RANGE
600-799 RANG
TEST
600-79
80
R11
R16
R21
R26
R31
R15
R20
R25
R30
R35
R38
R39
R40
R41
R42
R43
R44
R45
R46
R47
Q7
Q8
Q9
Q10
Q11
R10
R12
R13
R14
R17
R18
R19
R52
R22
R23
R24
R53
R27
R28
R29
R54
R32
R33
R55
CR1
RY-1
R4
R1
C1
C3
C4
Q3
Q2
Q6
R3
Q1
C2
R7
R51
R6
R49
R36
Q4
R5
CR2
CR3
CR4
CR5
CR6
RY2
RY3
RY4
RY5
X1
A-1
S-15

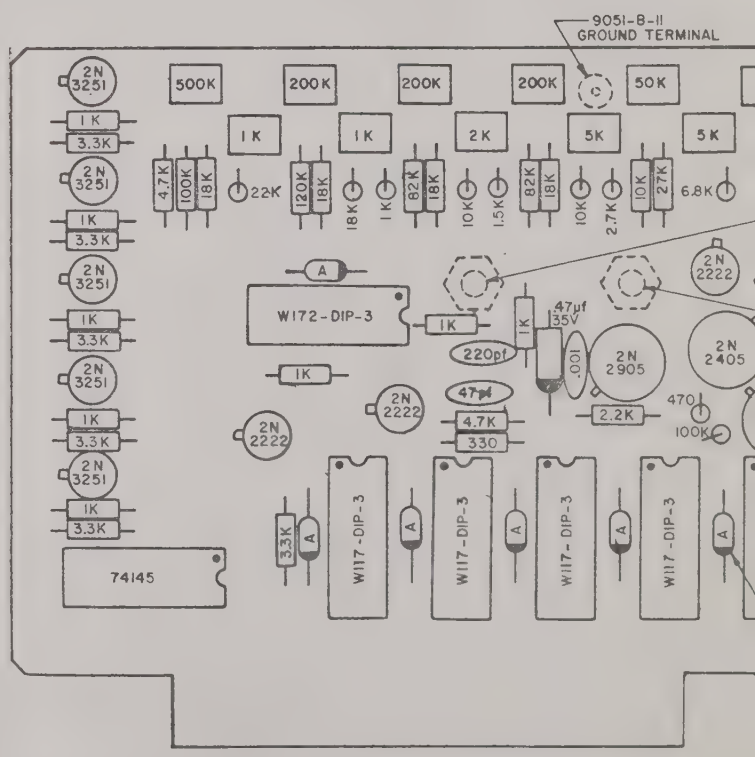
9051-8-11
GROUND TERMINAL
2N 3251
1K
3.3K
500K
200K
200K
200K
50K
1K
1K
2K
5K
5K
4.7K
100K
18K
22K
120K
18K
18K
1K
82K
18K
10K
1.5K
82K
18K
10K
2.7K
10K
27K
6.8K
A
W172-DIP-3
1K
1K
47µf
35V
220pf
.001
2N 2905
2N 2222
2N 2405
1K
2N 2222
47pf
4.7K
330
2.2K
470
100K
2N 2222
3.3K
A
W117-DIP-3
74145

DATE	REV	CHANGE	APD
8/19/77	E	ORIGINAL RELEASE AA	
9/31/77	F	INC ECN 2647	
1/4/78	F-1	INC ECN 2709	

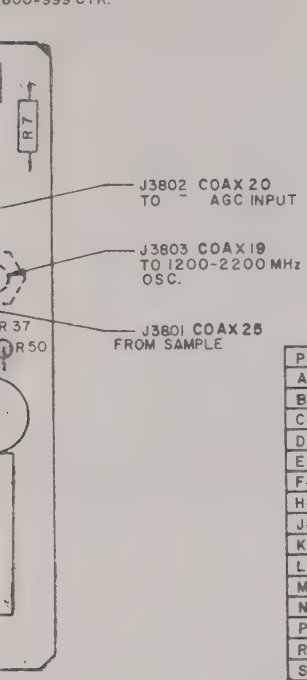

PIN	FUNCTION
A-1	800 MC LINE
B-2	400 MC LINE
C-3	200 MC LINE
D-4	+5 V
E-5	100 MC LINE
F-6	GROUND
H-7	NO CONNECTION
J-8	NO CONNECTION
K-9	+11 V
L-10	0-199 MHz
M-11	200-399 MHz
N-12	400-599 MHz
P-13	600-799 MHz
R-14	800-999 MHz
S-15	-35V

NOTES:

1. ALL RESISTORS ARE 1/4 W., 10% TOLERANCE EXCEPT AS NOTED.
2. ALL CAPACITOR VALUES ARE IN μF EXCEPT AS NOTED.
3. COMPONENT LEADS MAY EXTEND .04 TO .06 BEYOND BOTTOM OF BOARD AFTER SOLDERING.
4. MAXIMUM HEIGHT OF COMPONENTS TO BE .35 FROM COMPONENT SIDE OF BOARD.

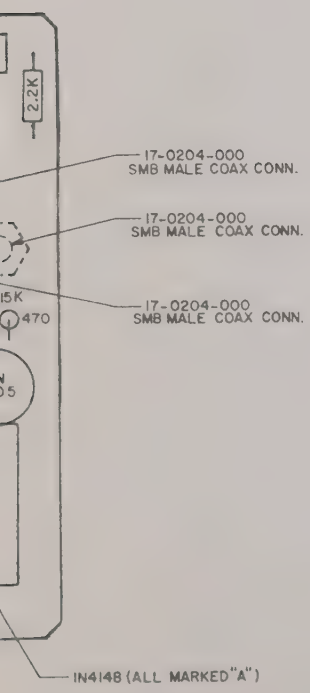

ITEM	REQ'D	PART NO	DESCRIPTION
	1	1-23-0423	P.C. BOARD ASS'Y

LIST OF MATERIALS

1-23-0582	1	1900A	1900A/1H
NEXT ASS'Y	QTY	MODEL	APPLICATION

TOLERANCES
UNLESS OTHERWISE SPECIFIED
ALL DIMENSIONS APPLY AFTER FINISH
DECIMALS .xx = ± .010 .xxx = ± .005
ANGLES ± 1/2°
FRACTIONS ± 1/64
SURFACE ROUGHNESS 125
REMOVE ALL BURRS

DRAWN Arlen DATE 8/19/77
CHECKED DATE 9/29/77
APPROVED DATE 9/29/77

-IFR INC-
WICHITA, KANSAS

TITLE
V.C.O. TUNER
P.C. BOARD
ASS'Y

MATERIAL
Finish

SIZE C | PART NUMBER 3-23-0423 | REV F
SCALE 2:1 | WEIGHT | SHEET 1 OF 1

Figure 6-58

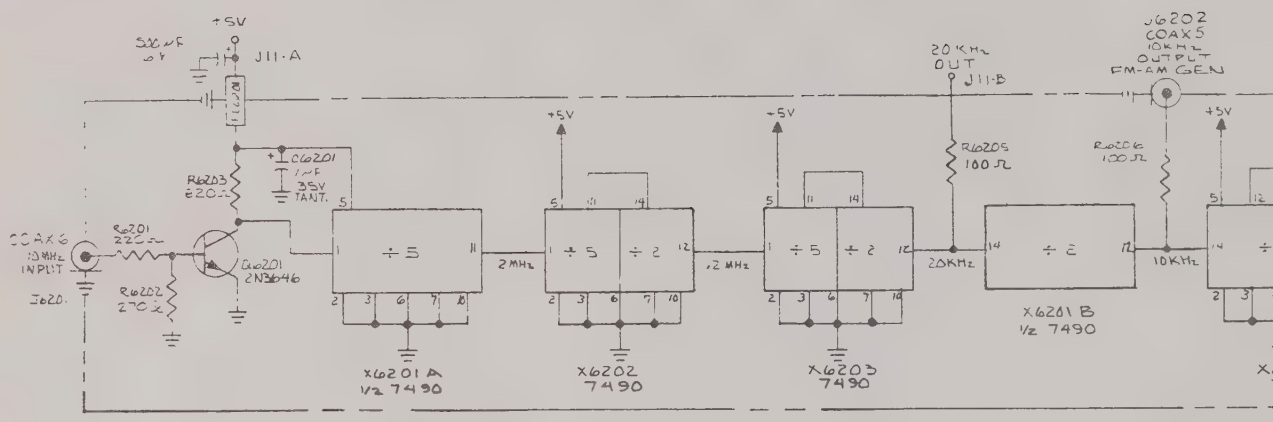
+5V
500 uF
J11-A
C6201
1 uF
35V
TANT.
R6203
220 Ω
COAX 6
10 MHz
INPUT
J620.
R6201
220 Ω
R6202
270 Ω
Q6201
2N3646
÷ 5
X6201 A
1/2 7490
2 MHz
÷ 5
÷ 2
X6202
7490
.2 MHz
÷ 5
÷ 2
X6203
7490
20 KHz
OUT
J11-B
R6205
100 Ω
20KHz
÷ 2
X6201 B
1/2 7490
J6202
COAX 5
10KHz
OUTPUT
FM-AM GEN
R6206
100 Ω
10KHz

DATE	REV	CHANGE	APP'D
8-19-74	A	INC ECN #1 L.D.	MD
12/6/74	B	INC ECN # 1205	MD
5/26/75	C	INCORP ECN # 1467 WW	MD
8-2-76	D	INCORP ECN # 16766 JWV	MD
3/30/77	E	INCORP ECN # 2541 AA BR	WW
1-8-79	G	UPDATED REV TO G TO REF WITH P/N INC 2709 JAT	

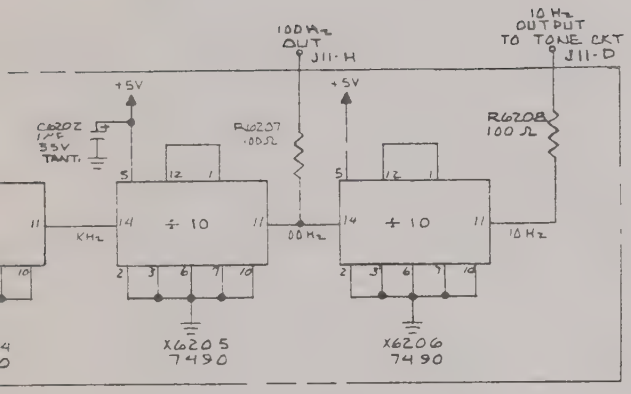

NEXT ASS'Y	QTY	MODEL	ITEM	REQ'D	PART NO.	DESCRIPTION
23-0093	1	FM-AM-1000	—	—	23-0062	SCHEMATIC

APPLICATION — LIST OF MATERIALS

TOLERANCES
UNLESS OTHERWISE SPECIFIED
ALL DIMENSIONS APPLY AFTER FINISH
DECIMALS .xx = ± .010 .xxx = ± .005
ANGLES ± 1/2°
FRACTIONS ± 1/64
SURFACE ROUGHNESS 125
REMOVE ALL BURRS

DRAWN 6 DATE 2-28-79
CHECKED 45 DATE 2-28-79
APPROVED MD DATE 3/31/79

MATERIAL —
TREATMENT —
FINISH —

INSTRUMENT FLIGHT RESEARCH CORPORATION
WICHITA, KANSAS

TITLE CLOCK DIVIDER

SIZE C — PART NUMBER 3-23-0062 — REV G

SCALE — WEIGHT — SHEET 1 OF 1

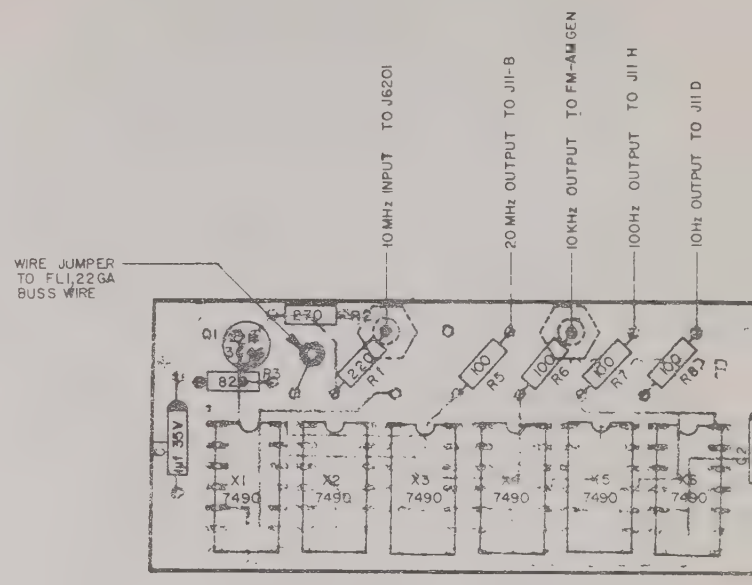
WIRE JUMPER
TO FL1, 22GA
BUSS WIRE
10 MHz INPUT TO J6201
20 MHz OUTPUT TO J11-B
10KHz OUTPUT TO FM-AM GEN
100Hz OUTPUT TO J11 H
10Hz OUTPUT TO J11 D
Q1
R2
R1
R3
R5
R6
R7
R8
C1
C2
X1
X2
X3
X4
X5
X6
7490
7490
7490
7490
7490
7490

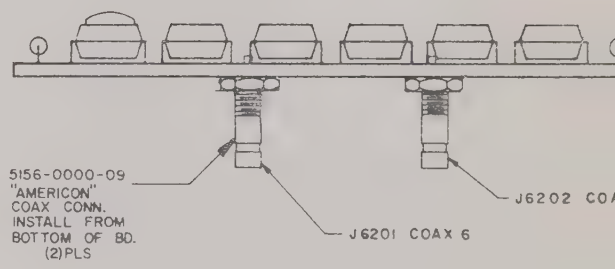
5156-0000-09
"AMERICON"
COAX CONN.
INSTALL FROM
BOTTOM OF BD.
(2) PLS
J6201 COAX 6
J6202 COA

DATE	REV	CHANGE	APP'D
10-21-77	G	ORIGINAL RELEASE TJT	
1-13-78	G-1	INC ECN 2709 JAJ	

1-23-0063
CLOCK DIVIDER
CIRCUIT BOARD

ITEM	REQ'D	PART NO	DESCRIPTION

LIST OF MATERIALS

4. SCHEMATIC NO 3-23-0062
3. MAXIMUM HEIGHT OF COMPONENTS TO BE .03 FROM COMPONENT SIDE OF BOARD.
2. COMPONENT LEADS MAY EXTEND .04 TO .06 BEYOND BOTTOM OF BOARD AFTER SOLDERING.
1. ALL RES. ARE 1/4W, 10%TOL.

OTES:

NEXT ASSY	QTY	MODEL
23-0217	1	1070B 1090A/B

APPLICATION

TOLERANCES
UNLESS OTHERWISE SPECIFIED
ALL DIMENSIONS APPLY AFTER FINISH
DECIMAL ± .XX = ± .010 .XXX = ± .005
ANGLES ± 1/2°
FRACTIONS ± 1/64 125
SURFACE ROUGHNESS
REMOVE ALL BURRS

DRAWN Ten Eyck DATE 10-21-77
CHECKED DATE
APPROVED DATE 11-77

-IFR INC-
WICHITA, KANSAS

TITLE
CLOCK DIVIDER
PC BOARD
ASSEMBLY

MATERIAL
FINISH

SIZE C | PART NUMBER 3-23-0093 | REV G-1
SCALE 2:1 | WEIGHT | SHEET 1 OF 1

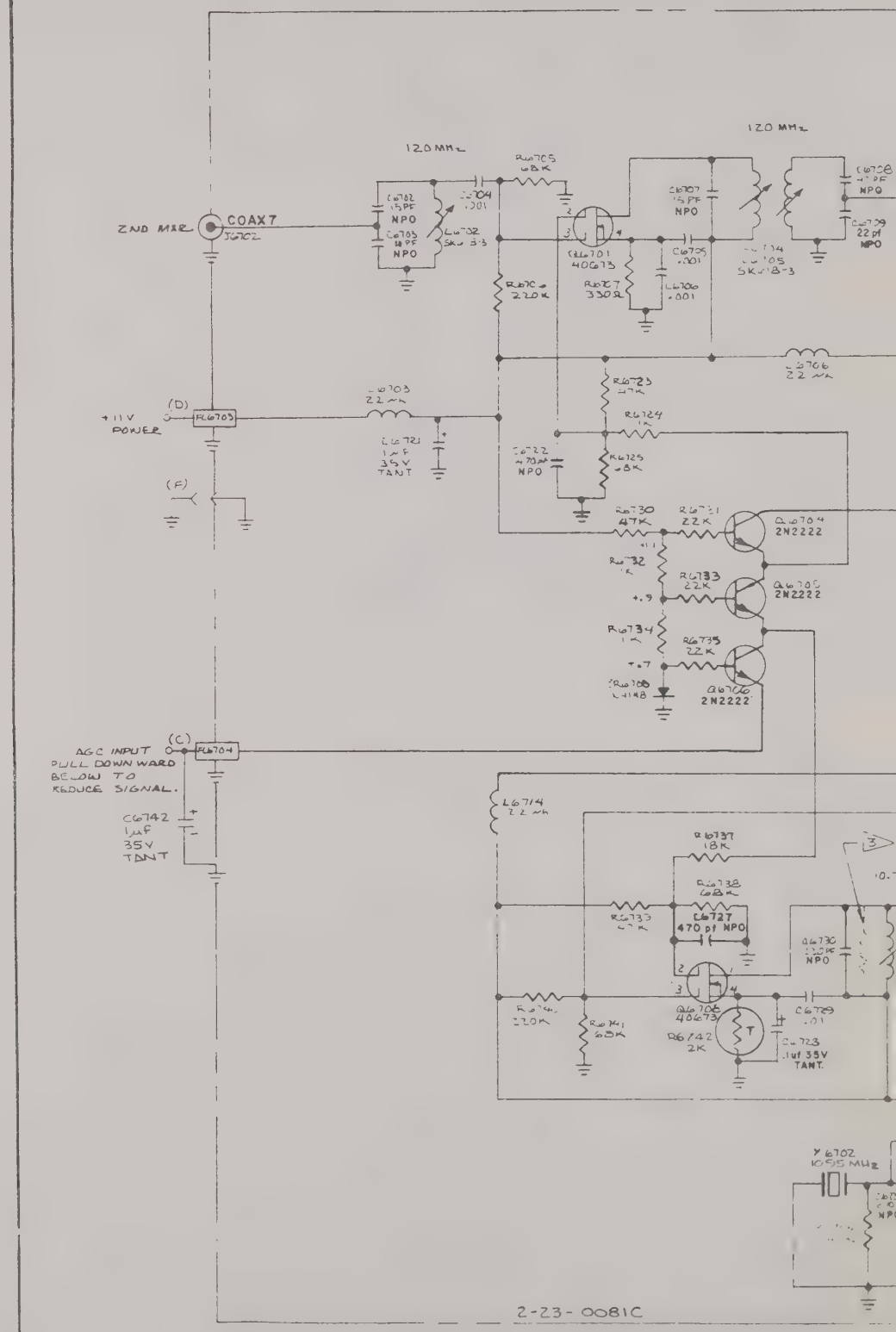
120 MHz
120 MHz
2ND MIX
COAX 7
J6702
C6702 15PF NPO
C6703 68PF NPO
L6702 SK-18-3
C6704 .001
R6705 68K
Q6701 40673
R6706 220K
R6707 330Ω
C6707 15PF NPO
C6725 .001
L6706 .001
L6704 L6705 SK-18-3
C6708 15PF NPO
C6709 22pf NPO
L6706 22 nh
R6723 47K
R6724 1K
C6722 470pf NPO
R6725 68K
+11V POWER
(D)
RL6703
L6703 22 nh
C6721 1uF 35V TANT
(F)
R6730 47K
R6731 22K
Q6704 2N2222
R6732 1K
R6733 22K
Q6705 2N2222
R6734 1K
R6735 22K
Q6706 2N2222
R6708 1N148
AGC INPUT PULL DOWN WARD BELOW TO REDUCE SIGNAL.
(C)
RL6704
C6742 1uF 35V TANT
L6714 22 nh
R6737 18K
R6738 68K
R6733 47K
C6727 470 pf NPO
Q6730 120K NPO
Q6708 40673
R6740 120K
R6741 68K
R6742 2K
C6723 .1uf 35V TANT.
C6739 .01
Y6702 10.95 MHz
2-23-0081C

DATE	REV	CHANGE	APPD
2-19-75	A	INC ECN 1197	
1-30-76	B	INC ECN 1239 & 1267	
4-4-77	C	INC ECN 1791 RKK	
6-10-77	D	INC ECN 2083 TJT	
4-6-78	E	INCORP. ECN # 2348	
7-17-78	F	INC ECN 2709	
7-7-78	G	INC ECN 2801 JRJ	

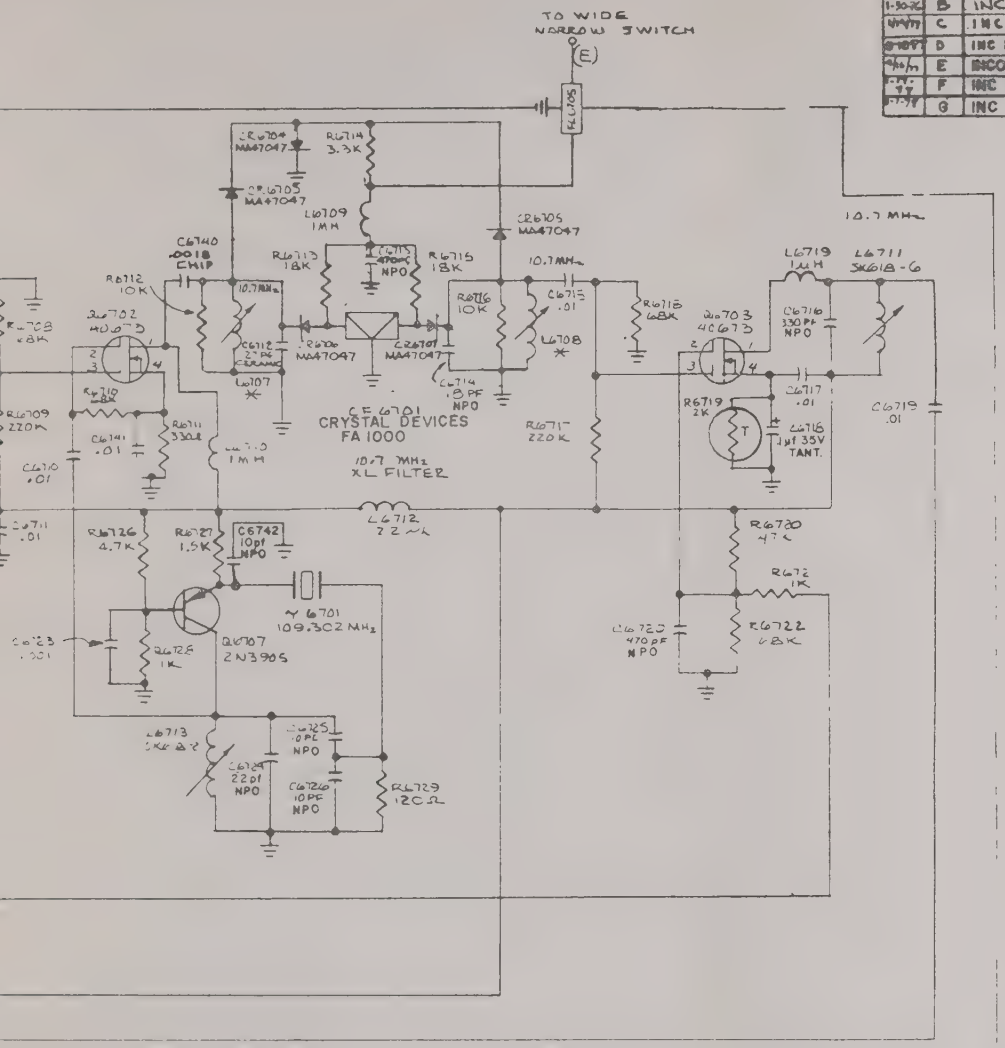

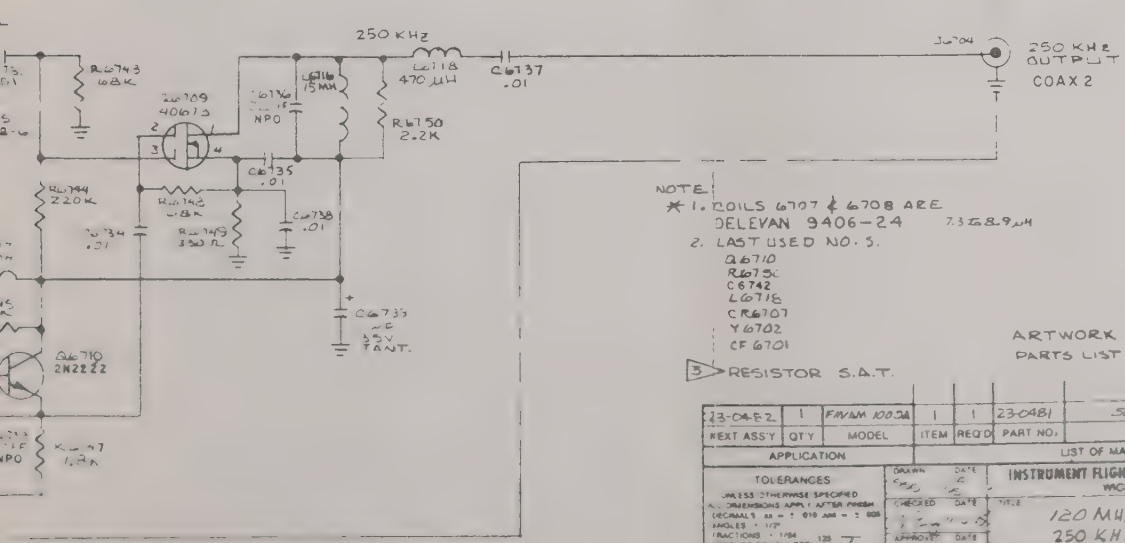

NOTE:
* 1. COILS 6707 & 6708 ARE DELEVAN 9406-24 7.3 to 8.9 μH
2. LAST USED NO. S.
Q6710
R6750
C6742
L6718
CR6707
Y6702
CF6701

3 RESISTOR S.A.T.

ARTWORK 2-23-0081C
PARTS LIST 1-23-0481

NEXT ASS'Y	QTY	MODEL	ITEM	REQ'D	PART NO.	DESCRIPTION
23-0481	1	FM/AM 100.3A	1	1	23-0481	SCHEMATIC

APPLICATION — LIST OF MATERIALS

TOLERANCES
UNLESS OTHERWISE SPECIFIED
ALL DIMENSIONS APPLY AFTER FINISH
DECIMALS .XX = ± .010 .XXX = ± .005
ANGLES ± 1/2°
FRACTIONS ± 1/64
SURFACE ROUGHNESS 125
REMOVE ALL BURRS

DRAWN — DATE
CHECKED — DATE
APPROVED — DATE 9-8-11-75

MATERIAL —
TREATMENT —
FINISH —

INSTRUMENT FLIGHT RESEARCH CORPORATION
WICHITA KANSAS

TITLE: 120 MHz RECEIVER 250 KHz OUTPUT FM/AM 100A

SIZE C — PART NUMBER 23-0481 — REV G
SCALE — WEIGHT —
SHEET 1 OF 1

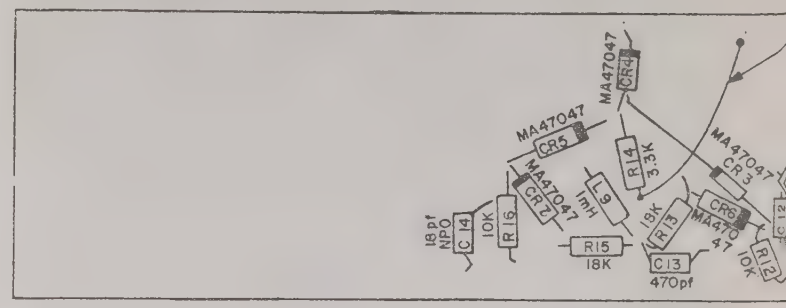

BOTTOM VIEW

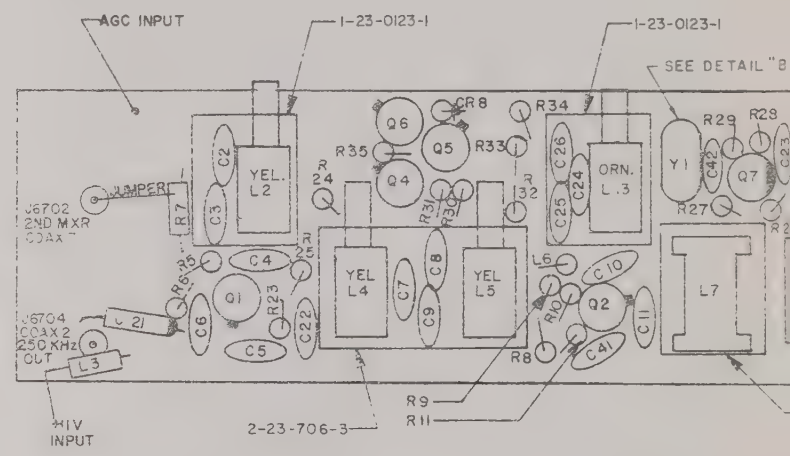

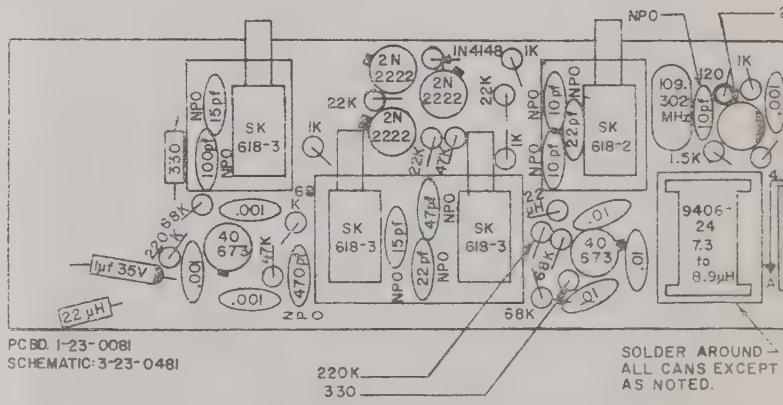

NOTES:

1. ALL RESISTORS ARE 1/4 W., 10% TOLERANCE EXCEPT AS NOTED.
2. ALL CAPACITOR VALUES ARE IN µF EXCEPT AS NOTED.
3. COMPONENT LEADS MAY EXTEND .04 TO .06 BEYOND BOTTOM OF BOARD AFTER SOLDERING.
4. MAXIMUM HEIGHT OF COMPONENTS TO BE .65 FROM COMPONENT SIDE OF BOARD AND .11 FROM BOTTOM SIDE OF BOARD.
5. PLACE CHIP CAPACITORS ON BACK SIDE OF BOARD.
6. ALL COMPONENT DESIGNATORS HAVE 67 PREFIX; i.e. R6701, Q6701 etc.

DATE	REV	CHANGE	APP'D
9-1-77	D	ORIGINAL RELEASE TJT	
[illegible]	E	[illegible]	
1-6-77	E	ADDED CONN. DES. & COAX NOS. TO CONNECTORS. TenEyck	
3-7-78	F	INC ECN 2824, 2801, 2870	
5-5-78	G	INC ECN 2954 & 2999 TenEyck	

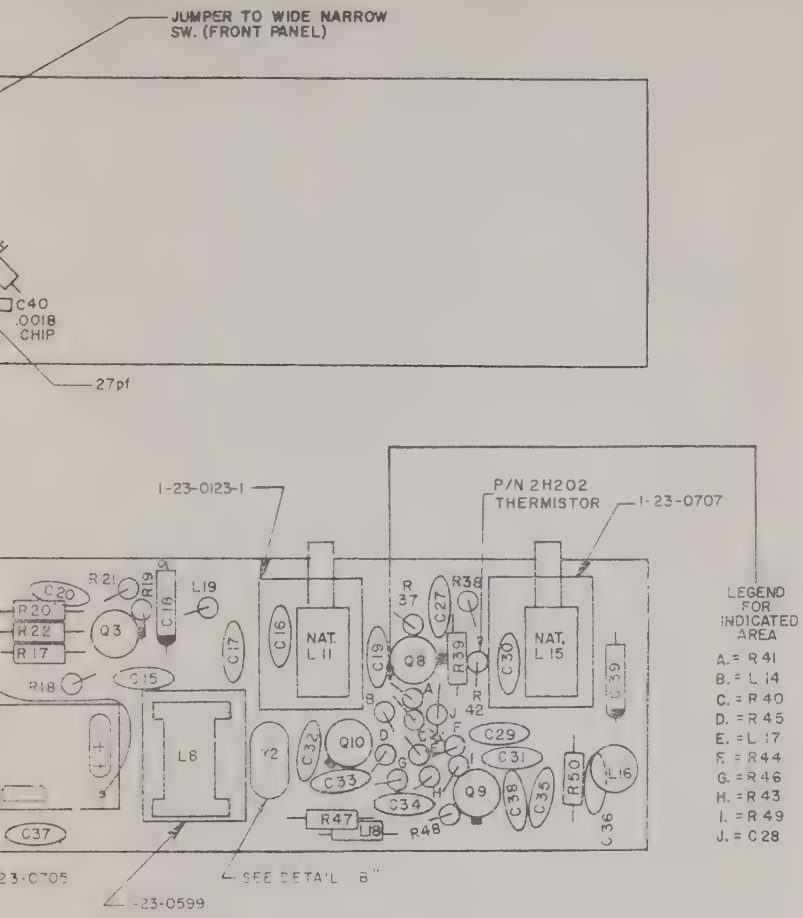

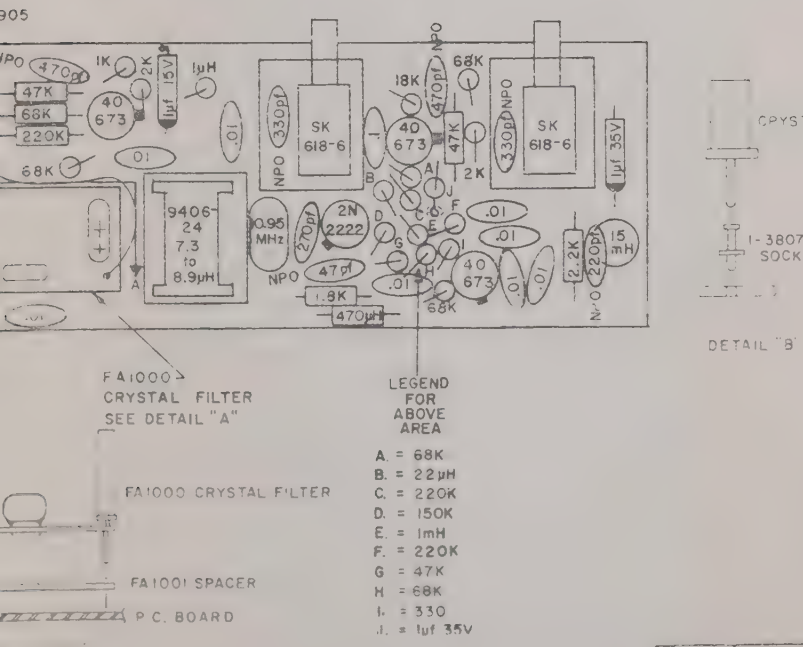

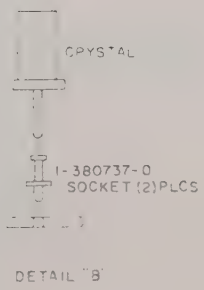

ITEM	REQ'D	PART NO	DESCRIPTION

23-0483	1	PC BOARD 120MHz	
23-0483	1	FINAL 120MHz	
NEXT ASSY	QTY	MODEL	

APPLICATION

TOLERANCES
UNLESS OTHERWISE SPECIFIED
ALL DIMENSIONS APPLY AFTER FINISH
FRACTIONS
SURFACE ROUGHNESS
REMOVE ALL BURRS

DRAWN TJT 9/26/77
CHECKED DATE
APPROVED DATE

MATERIAL
FINISH

-IFR INC-
WICHITA KANSAS

120MHz RECEIVER
PC BOARD ASSEMBLY

SIZE C
3-23-0482
REV G
SCALE 2:1
SHEET

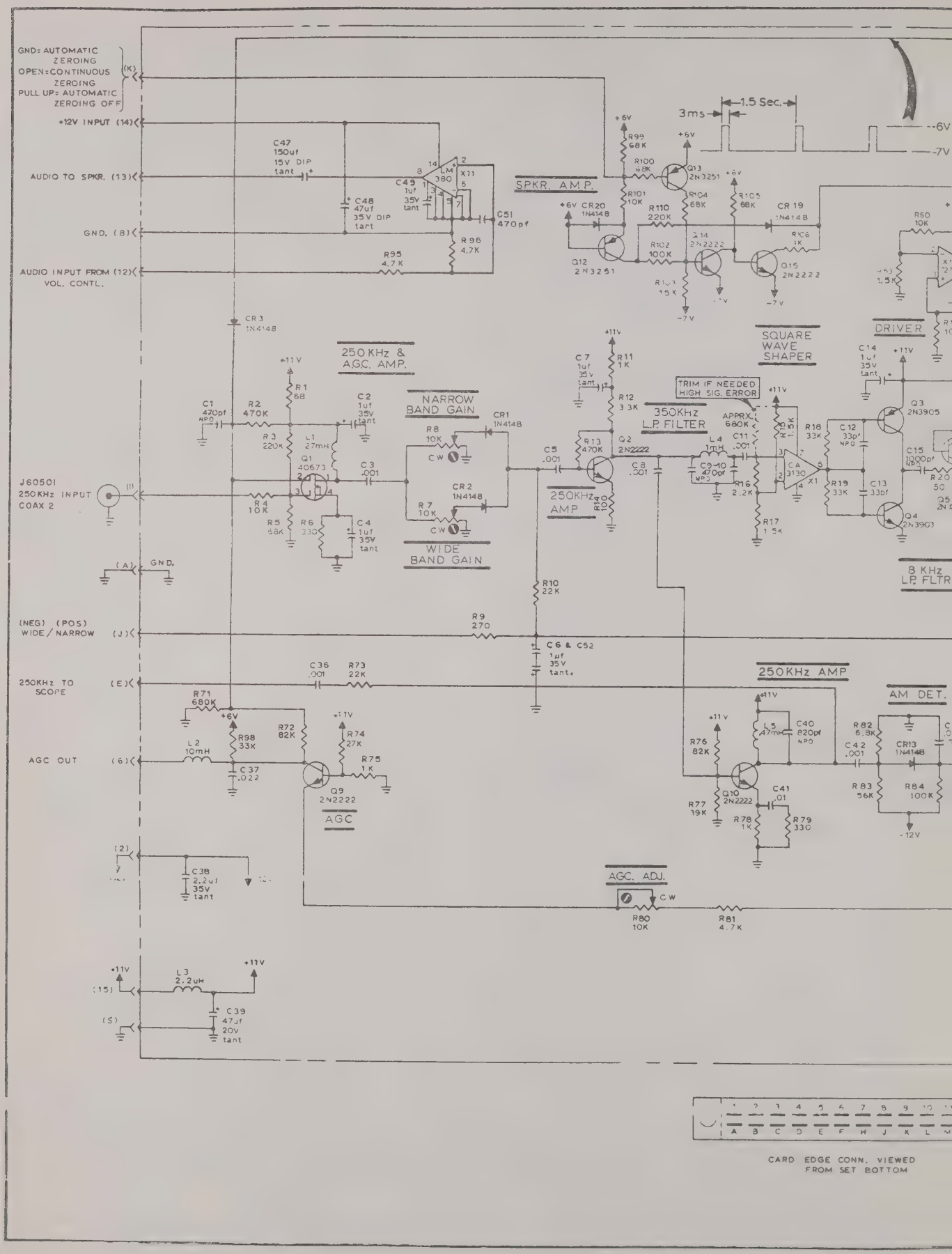
GND= AUTOMATIC ZEROING
OPEN=CONTINUOUS ZEROING
PULL UP= AUTOMATIC ZEROING OFF
(K)
+12V INPUT (14)
AUDIO TO SPKR. (13)
GND. (8)
AUDIO INPUT FROM (12)
VOL. CONTL.
C47 150uf 15V DIP tant
C48 47uf 35V DIP tant
C49 1uf 35V tant
LM 380
X11
C51 470pf
R96 4.7K
R95 4.7K
SPKR. AMP.
CR20 1N4148
Q12 2N3251
R99 68K
R100 68K
Q13 2N3251
R101 10K
R104 68K
R105 68K
R110 220K
CR19 1N4148
R102 100K
Q14 2N2222
R106 1K
Q15 2N2222
R103 15K
1.5 Sec.
3ms
-6V
-7V
+6V
R60 10K
R53 1.5K
DRIVER
CR3 1N4148
250 KHz & AGC. AMP.
+11V
R1 68
C1 470pf NPO
R2 470K
C2 1uf 35V tant
R3 220K
L1 27mH
Q1 40673
C3 .001
R4 10K
R5 68K
R6 330
C4 1uf 35V tant
NARROW BAND GAIN
R8 10K
CW
CR1 1N4148
CR2 1N4148
R7 10K
WIDE BAND GAIN
C7 1uf 35V tant
R11 1K
R12 3.3K
350KHz L.P. FILTER
TRIM IF NEEDED HIGH SIG. ERROR
APPRX. 680K
C5 .001
R13 470K
Q2 2N2222
C8 .001
L4 1mH
C11 .001
C9-10 470pf NPO
R16 2.2K
R17 1.5K
250KHz AMP
R14 10
SQUARE WAVE SHAPER
CA 3130
X1
R18 33K
R19 33K
C12 33pf NPO
C13 33pf
C14 1uf 35V tant
Q3 2N3905
Q4 2N3903
C15 2200pf NPO
R20 50
8 KHz L.P. FLTR
J60501 250KHz INPUT COAX 2
(I)
(A)
GND.
(NEG) (POS) WIDE/NARROW
(J)
R9 270
R10 22K
C6 & C52 1uf 35V tant.
250KHz TO SCOPE
(E)
C36 .001
R73 22K
250KHz AMP
R71 680K
+6V
R98 33K
R72 82K
R74 27K
R75 1K
AGC OUT
(6)
L2 10mH
C37 .022
Q9 2N2222
AGC
L5 47mH
C40 820pf NPO
R76 82K
Q10 2N2222
C41 .01
R77 39K
R78 1K
R79 330
AM DET.
R82 6.8K
C42 .001
CR13 1N4148
R83 56K
R84 100K
-12V
(2)
C38 2.2uf 35V tant
AGC. ADJ.
CW
R80 10K
R81 4.7K
(15)
L3 2.2uH
(5)
C39 47uf 20V tant
1 2 3 4 5 6 7 8 9 10
A B C D E F H J K L M
CARD EDGE CONN. VIEWED FROM SET BOTTOM

DATE	REV.	CHANGE	APP'D
2-16-77	A	INC ECN. 1884	
8-2-77	B	INC ECN 2126 A.A.	
4/26/77	C	INCORP ECN # 2373	
[illegible]	D	INCORP ECN # 2531	
[illegible]	E	INC ECN 2709, 2788 2835 JAJ	

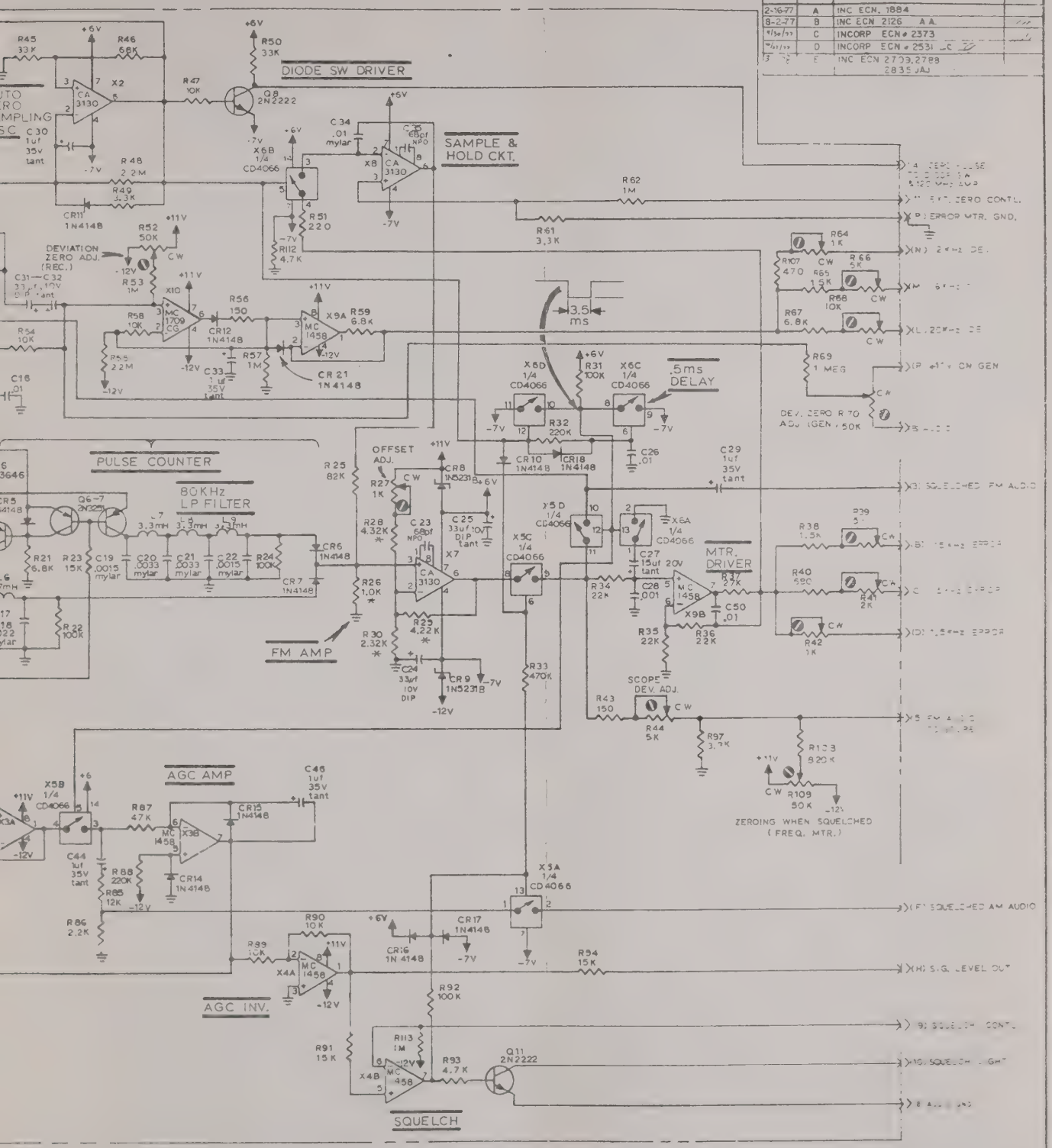

2-23-0613 P/LIST
2-23-0612 ARTWORK

P R S

TOP (COMPONENT SIDE)

1. ALL RES. IN Ω 1/8 W
   * NOTED ARE 1% 1/4 W
2. CAPS. IN uf UNLESS OTHERWISE NOTED
3. LAST NUMBERS USED R113, C52, CR21 Q16, L9, TH1, X12
4. NOS. NOT USED. C45, CR4
5. 'SM' CAPACITORS ARE "NPO" TYPE ON SOME UNITS

INSTRUMENT FLIGHT RESEARCH CORP.
4053 Navajo Lane
Wichita, Ks.

RKK 7/76

250 KHz IF-MON.-AUDIO BOARD (SCHEMATIC)

4-23-0605

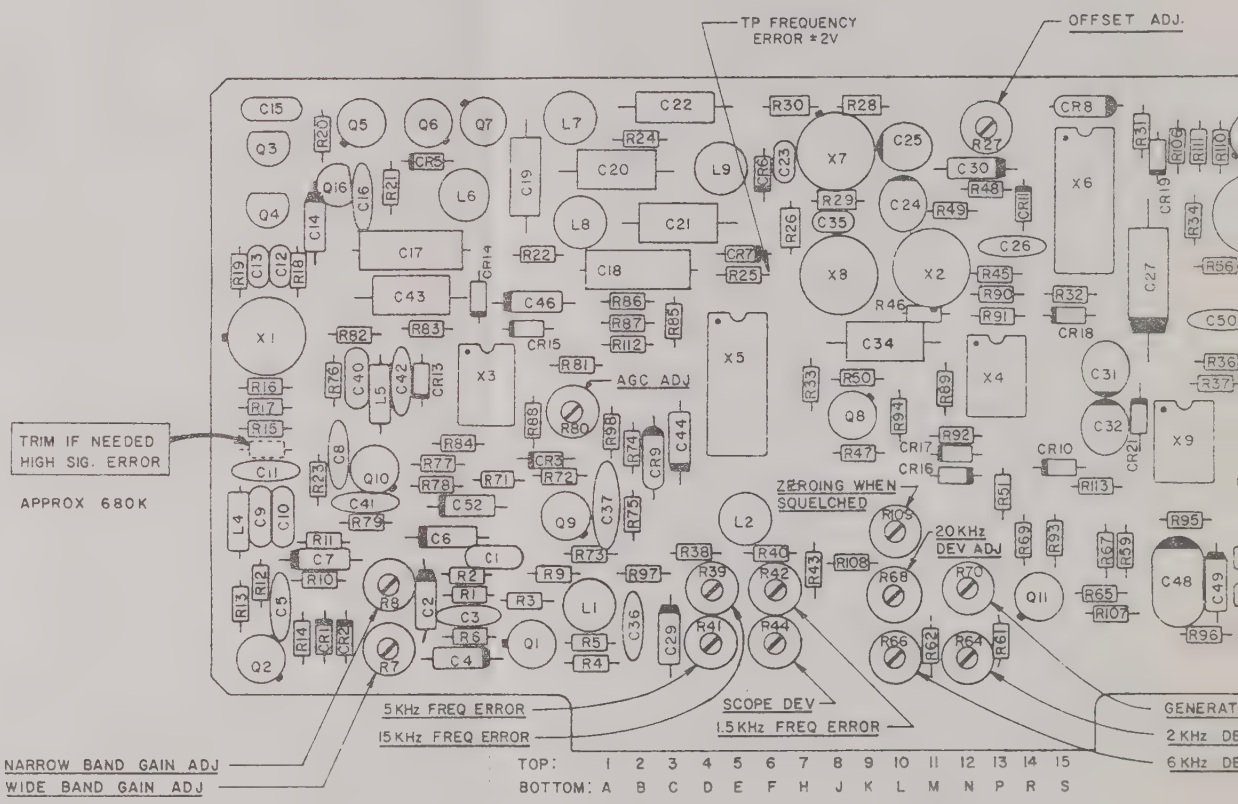

PC BOARD # 2-23-0572
SCHEMATIC # 4-23-0605

PIN #	FUNCTION	PIN #	FUNCTION
15	+11 V	S	GROUND
14	+12 V INPUT	R	+11 V ON GEN
13	AUDIO TO SPEAKER	P	ERROR MTR GND
12	AUDIO INPUT FROM VOL CONTL	N	2 KHz DEVIATION
11	EXT ZERO CONTROL	M	6 KHz DEVIATION
10	SQUELCH LIGHT	L	20 KHz DEVIATION
9	SQUELCH CONTROL	K	GND= AUTOMATIC ZEROING OPEN=CONTINUOUS ZEROING PULL UP= AUTO ZEROING OFF
8	AUDIO GROUND	J	(NEG) (POS) WIDE / NARROW
7	NC	H	SIG LEVEL OUT
6	AGC OUT	F	SQUELCHED AM AUDIO
5	FM AUDIO TO SCOPE	E	250 KHz TO SCOPE
4	ZERO PULSE TO DIODE SW & 1200 MHz AMP	D	1.5 KHz ERROR
3	SQUELCHED FM AUDIO	C	5 KHz ERROR
2	-12 V	B	15 KHz ERROR
1	250 KHz INPUT	A	GROUND

DATE	REV	CHANGE	APP'D
9/12/77	B	ORIGINAL RELEASE	[illegible]
[illegible]	C	INCORP ECN # 2373, 2447 WC	[illegible]
[illegible]	D	WC ECN # 2519 & 2531 WC	[illegible]
[illegible]	E	INC ECN 2[illegible]	[illegible]

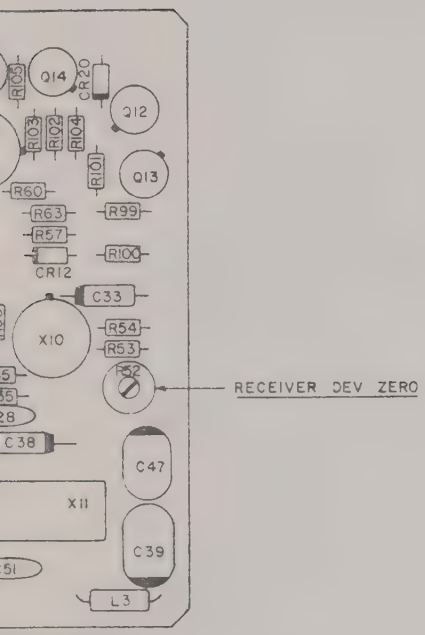

LIST OF MATERIALS

TOLERANCES

ALL DIMENSIONS APPLY AFTER FINISH

REMOVE ALL BURRS

MATERIAL

FINISH

DRAWN

CHECKED

APPROVED

APPLICATION

NEXT ASSY

QTY

MODEL

- IFR INC -
WICHITA, KANSAS

SIZE

DRAWING NUMBER

SCALE

WEIGHT

SHEET OF

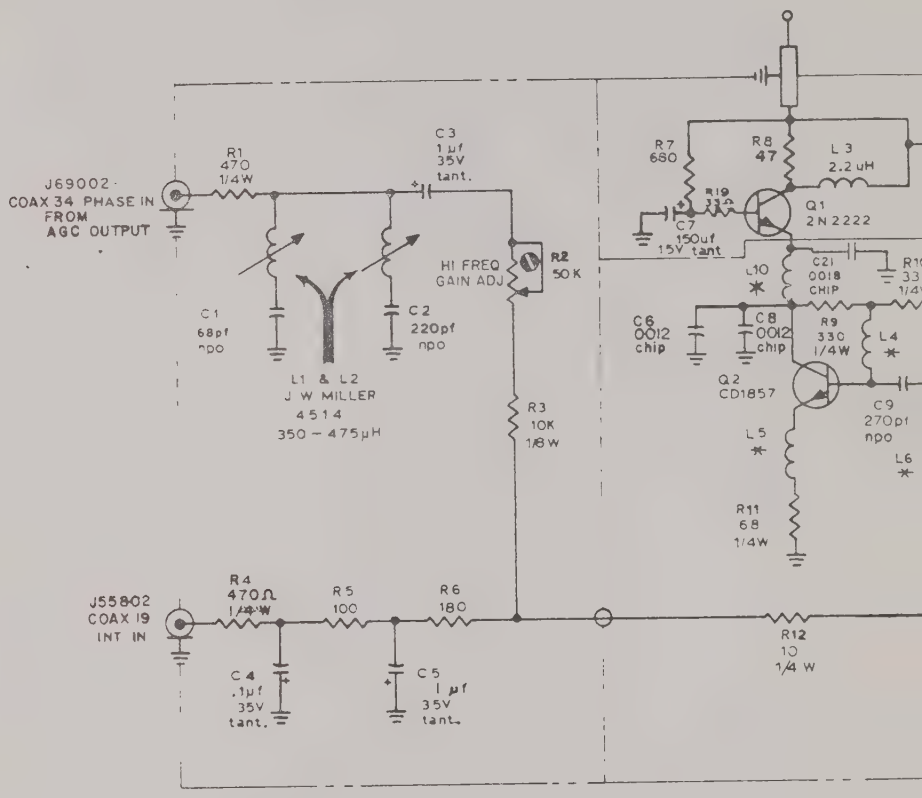

NOTES:

1. ALL RESISTORS ARE 1/8 W 10% EXCEPT AS SHOWN.
2. ALL RESISTANCES ARE IN OHMS EXCEPT AS SHOWN
3. ALL CAPACITANCES ARE IN MICROFARADS EXCEPT

DATE	REV	CHANGE	APPD
2-16 77	A	INCORP ECN #1943 WW	
5-4-77	B	INCORP ECN #2013 T.T.	
7/27/77	C	INCORP. ECN # 2193 LC WW	
9/24/77	D	INCORP ECN # 2316 LC	
[illegible]	E	INC ECN 2624	
[illegible]	F	INC. ECN # 2647 TT WW	WW
3/10/78	G	INC. ECN # 2869 LC WW	WW

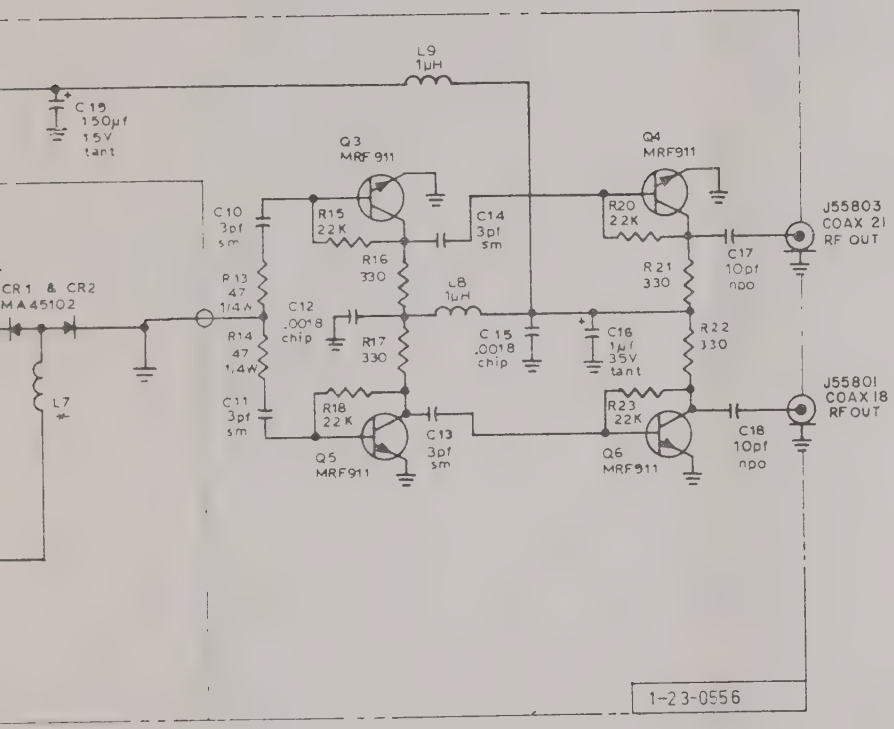

4,L5,L6,L7,L10 ARE 1-23-0597

SHOWN.

LAST USED NO'S
C21
C42
L8
[illegible]
R25

ITEM	REQ'D	PART NO.	DESCRIPTION
1	—	1-23-0597	[illegible]

LIST OF MATERIALS

- [illegible] INC -
WICHITA, KANSAS

TOLERANCES
UNLESS OTHERWISE SPECIFIED
ALL DIMENSIONS APPLY AFTER FINISH

7

6-23-78

2200-2200MHz OSC.,
BUFFER, TUNE
SUMMATION SCHEMATIC

G 3-23-0558

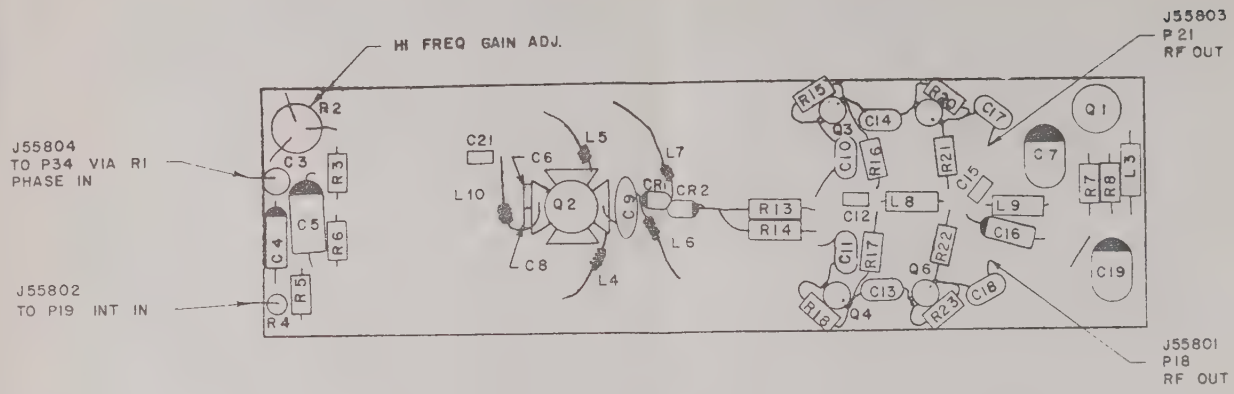

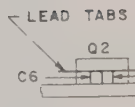

ASSEMBLY NO
1. THE CHIP
NON-METAL
2. THE TWO C
TRANSISTOR
TABS OF T
OTHER. TR
ARE MOUNT
3. C9 CAPACIT
ATTACHED
LEAD TO B
C9 SHOULD
VARIED DU
4. CR2 DIODE
THE BUSS
RESISTORS.
5 THE LEADS
TO THE TR
POSSIBLE

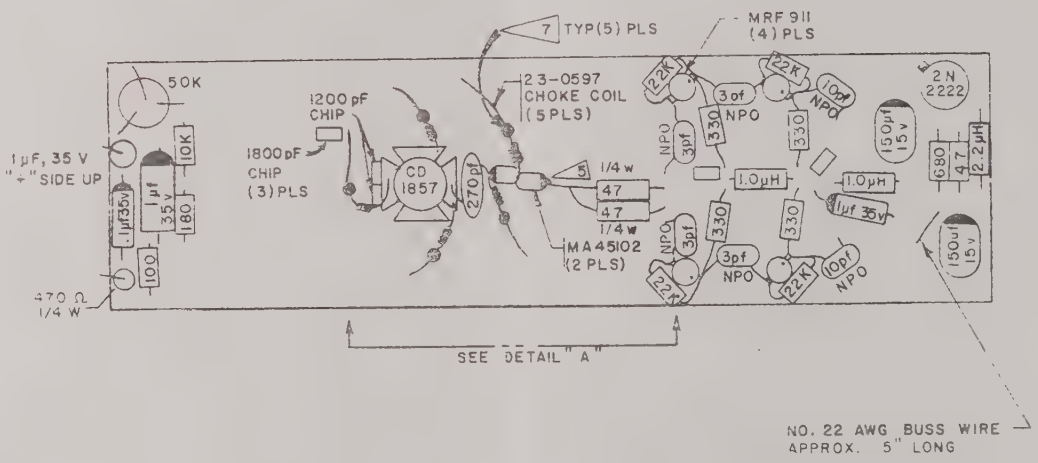

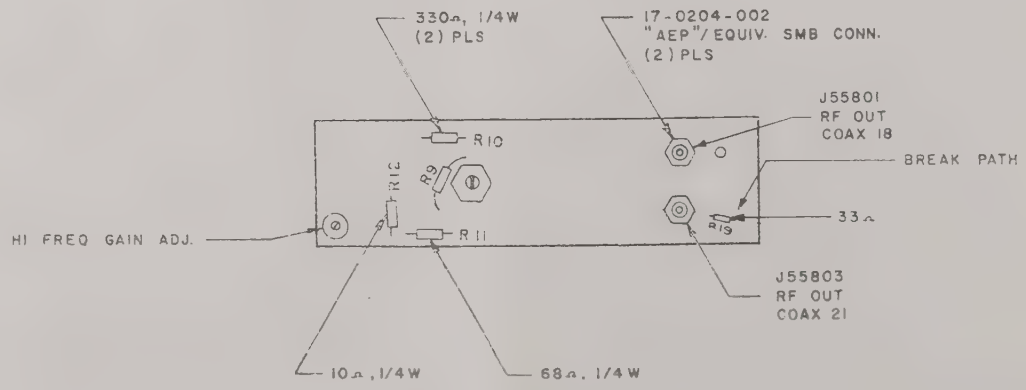

4-4	C	ORIGINAL RELEASE
4-29	D	INC. ECN # 20456 2013 TT
[illegible]	E	INCORP ECN # 2193
[illegible]	G	[illegible]
[illegible]	H	[illegible] ECN 2647
[illegible]	H-1	INC ECN 2703

DETAIL "A"

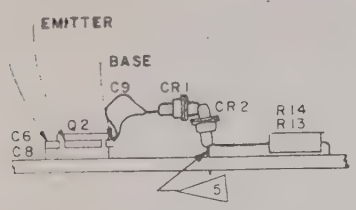

PACITORS MUST BE HANDLED WITH THE AID OF TWEEZERS, OR BY USING LEAD TABS
CAPACITORS ARE MOUNTED AS CLOSE TO THE S POSSIBLE AND BACK-TO-BACK, WITH THE LEAD TWO CAPACITORS EXTENDING AWAY FROM EACH LEAD TAB FLUSH WITH COLLECTOR AFTER CHIPS

IS MOUNTED IN A VERTICAL PLANE WITH ONE END CLOSE AS POSSIBLE TO THE TRANSISTOR (BASE AS SHORT AS POSSIBLE). THE OTHER LEAD OF APPROX. .25 SO THAT CR1 LEAD JOINT MAY BE VCO ALIGNMENT
HOULD BE MOUNTED APPROX. VERTICAL AND ON E JUST ABOVE THE JUNCTION OF R13 AND R14
1 & CR2 LEADS TO BE AS SHORT AS POSSIBLE.
F THE FIVE COILS (23-0597) THAT ARE ATTACHED SISTOR OR DIODE SHOULD BE AS SHORT AS E FLAG # 7.

NOTES:

1. ALL RESISTORS ARE 1/8W., 10% TOLERANCE EXCEPT AS NOTED.
2. ALL CAPACITOR VALUES ARE IN µF EXCEPT AS NOTED.
3. COMPONENT LEADS MAY EXTEND .04 TO .06 BEYOND BOTTOM OF BOARD AFTER SOLDERING.
4. MAXIMUM HEIGHT OF COMPONENTS TO BE .35 FROM COMPONENT SIDE OF BOARD
5. USE NO. 22 AWG BUSS WIRE TO CONNECT MA45102 DIODE & (2) 47Ω RESISTORS TO GROUND.
6. FM/AM 1000A
7. APPLY 1/16" DIA STRAND OF "G.E."/EQUIV. RTV FROM GROUND LEAD OF COIL TO SURFACE OF BOARD, APPROX. 1/8" FROM COIL.

ITEM	REQ'D	PART NO.	DESCRIPTION
1	1	23-0559	1200-2200 MHz OSC PC BD ASS'Y

LIST OF MATERIALS

TOLERANCES
UNLESS OTHERWISE SPECIFIED
ALL DIMENSIONS APPLY AFTER FINISH
DECIMALS .XX = ± .010 .XXX = ± .005
ANGLES ± 1/2°
FRACTIONS ± 1/64
SURFACE ROUGHNESS 125
REMOVE ALL BURRS

DRAWN RKK 4-5-77
CHECKED 4-14-77
APPROVED DATE

-IFR INC-
WICHITA, KANSAS

TITLE 1200 - 2200 MHz OSCILLATOR P.C BOARD ASS'Y

MATERIAL
FINISH

SIZE C | PART NUMBER 3-23-0559 | REV
SCALE | WEIGHT 2:1 & NOTED | SHEET 1 OF 1

23-0560 | 1 | 16 | NEXT ASSY | QTY | MODEL
APPLICATION

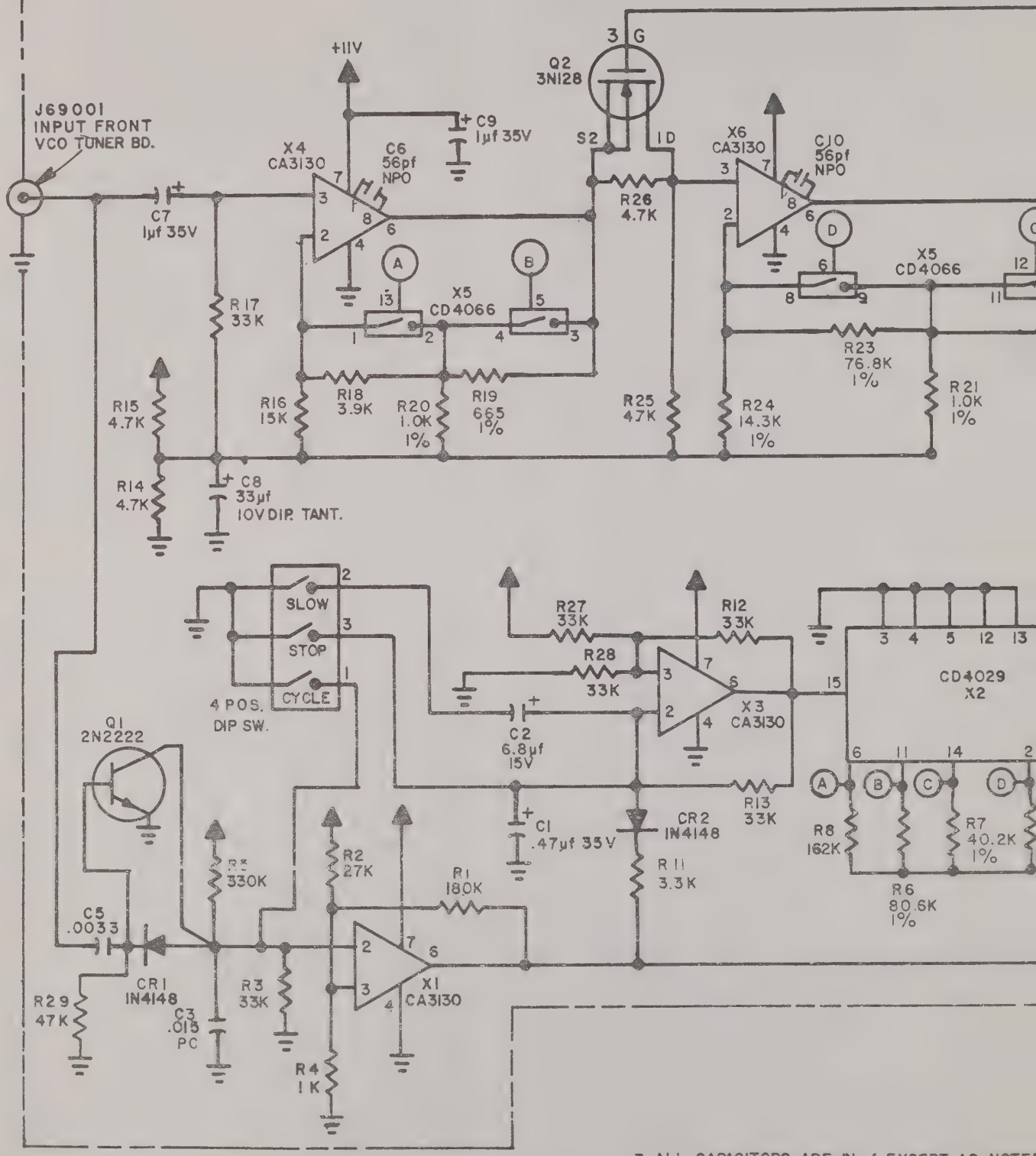

3. ALL CAPACITORS ARE IN µf EXCEPT AS NOTED

2 LAST NOS. USED C10, R29, X6, D2, & J2.

1. ALL RESISTORS ARE 1/4W 10% TOL & VALUES OHMS UNLESS OTHERWISE SPECIFED.

NOTES:

DATE	REV	CHANGE	APP'D
1-19-78	A	INC. ECN NO. 2717 A.A.	WW
3-9-78	B	INC ECN 2819 2709 JAJ	WW
4-10-78	C	INC ECN 2912	WW

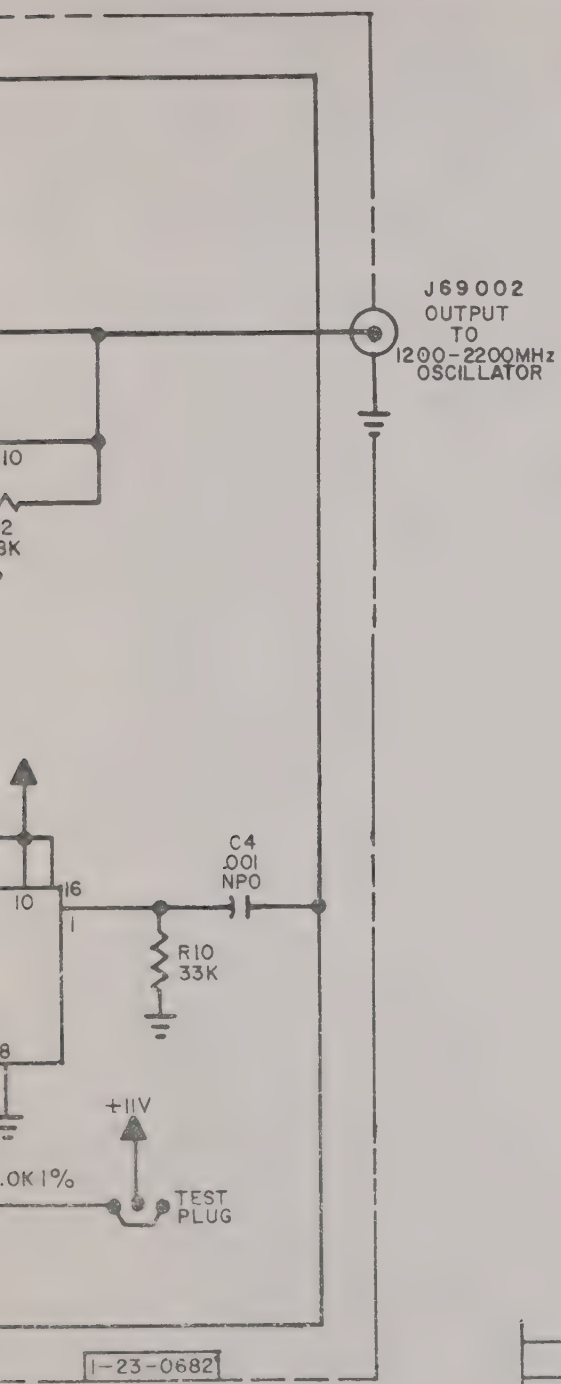

EFFECTIVE: 1000A S/N882 & ON
1000S S/N170 & ON

ITEM	REQ'D	PART NO.	DESCRIPTION

LIST OF MATERIALS

23-0644	1	FM-AM 1000B	
23-0216	1	FM-AM 1000A	
NEXT ASS'Y	QT'Y	MODEL	

APPLICATION

TOLERANCES
UNLESS OTHERWISE SPECIFIED
ALL DIMENSIONS APPLY AFTER FINISH
DECIMALS .xx = ± .010 .xxx = ± .005
ANGLES ± 1/2°
FRACTIONS ± 1/64
SURFACE ROUGHNESS 125 J
REMOVE ALL BURRS

DRAWN TenEyck DATE 11-29-77
CHECKED DATE 11-29-77
APPROVED DATE 12-10-77

MATERIAL
FINISH

-IFR INC-
WICHITA, KANSAS

TITLE
AGC SYSTEM
SCHEMATIC

SIZE B
PART NUMBER 2-23-0690
REV C
SCALE
WEIGHT
SHEET 1 OF 1

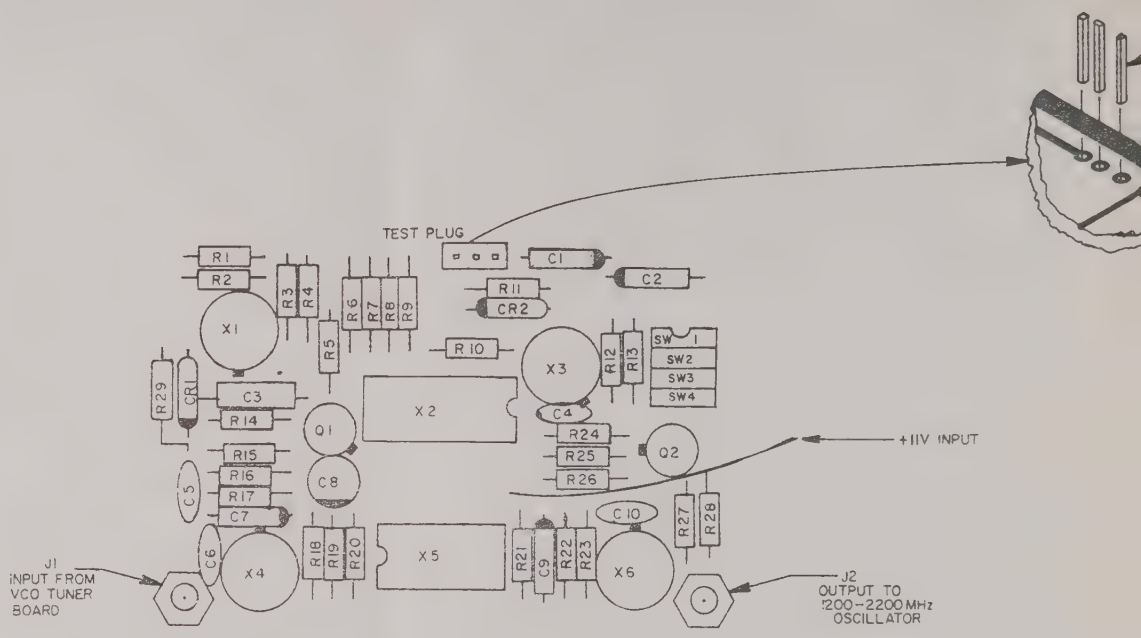

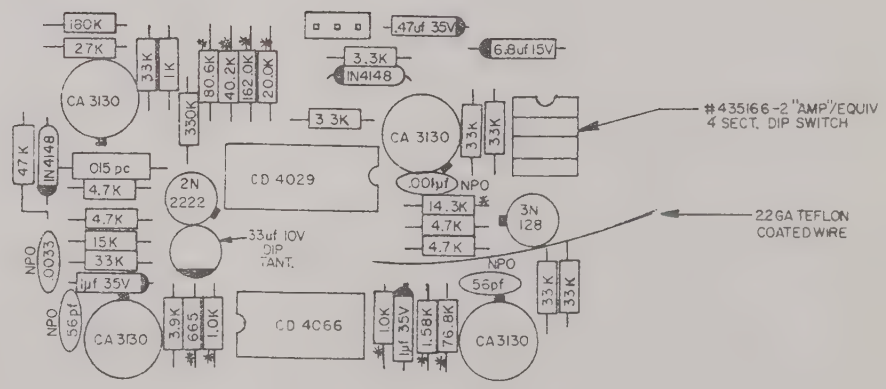

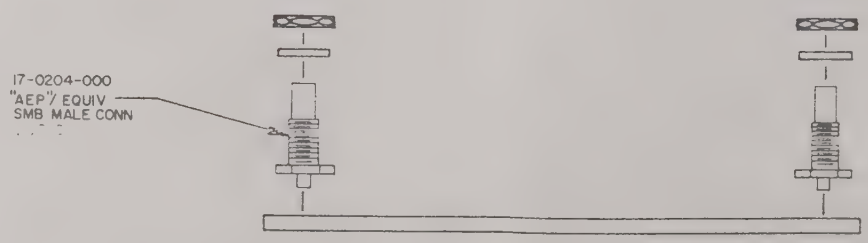

7. SCHEMATIC NO. 2-23-0690
6. PC BOARD NO. 1-23-0682
5. COMPONENT LEADS MAY EXTEND .04
OF BOARD AFTER SOLDERING.
4. MAX. HEIGHT OF COMPONENTS TO BE
FROM COMPONENT SIDE OF BOARD.
3. ALL CAPACITORS ARE IN µf EXCEPT AS
2. "*" DENOTES 1/4W, 1% TOL. RESISTORS.
1. ALL RESISTORS ARE 1/4W, 10% TOL. EX

DATE	REV	CHANGE	APP'D
6-10-79	A	INC ECN 2912	

#85931-6 "AMP"/EQUIV
UNINSULATED POST
(3) PLS

EFFECTIVE: FM/AM1000A S/N 882 & ON
FM/AM1000S S/N 170 & ON

ITEM	REQ'D	PART NO.	DESCRIPTION

LIST OF MATERIALS

06 BEYOND BOTTOM

ED.

T AS NOTED.

23-0216	1	FM/AM 1000A	
23-0644	1	FM/AM 1000S	
NEXT ASS'Y	QTY	MODEL	APPLICATION

TOLERANCES
UNLESS OTHERWISE SPECIFIED
ALL DIMENSIONS APPLY AFTER FINISH
DECIMALS .XX = ± .010 .XXX = ± .005
ANGLES ± 1/2°
FRACTIONS ± 1/64
SURFACE ROUGHNESS 125
REMOVE ALL BURRS

DRAWN TenEyck DATE 11-28-77
CHECKED DATE
APPROVED DATE

- IFR INC -
WICHITA, KANSAS

TITLE
AGC SYSTEM
PC BOARD
ASSEMBLY

MATERIAL
FINISH

SIZE C | PART NUMBER 3-23-0686 | REV A
SCALE 2=1 | WEIGHT — | SHEET 1 OF 1

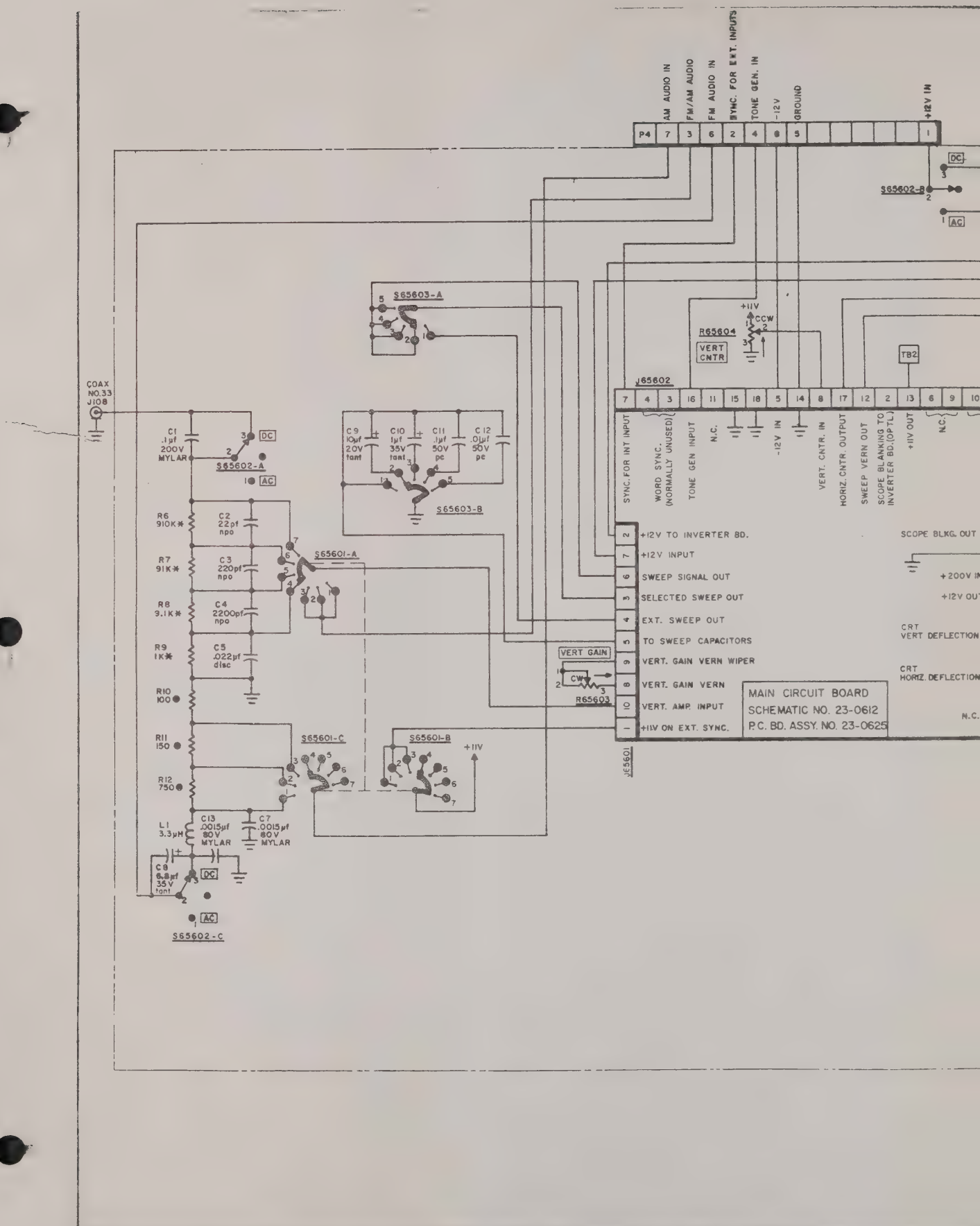
AM AUDIO IN
FM/AM AUDIO
FM AUDIO IN
SYNC. FOR EXT. INPUTS
TONE GEN. IN
-12V
GROUND
+12V IN
P4
S65602-B
DC
AC
S65603-A
+11V
CCW
R65604
VERT CNTR
TB2
J65602
COAX NO.33 J108
C1 .1µf 200V MYLAR
S65602-A
C9 10µf 20V tant
C10 1µf 35V tant
C11 .1µf 50V pc
C12 .01µf 50V pc
S65603-B
SYNC. FOR INT INPUT
WORD SYNC. (NORMALLY UNUSED)
TONE GEN INPUT
N.C.
-12V IN
VERT. CNTR. IN
HORIZ. CNTR. OUTPUT
SWEEP VERN OUT
SCOPE BLANKING TO INVERTER BD.(OPTL)
+11V OUT
N.C.
R6 910K*
C2 22pf npo
R7 91K*
C3 220pf npo
R8 9.1K*
C4 2200pf npo
R9 1K*
C5 .022µf disc
S65601-A
+12V TO INVERTER BD.
+12V INPUT
SWEEP SIGNAL OUT
SELECTED SWEEP OUT
EXT. SWEEP OUT
TO SWEEP CAPACITORS
VERT. GAIN VERN WIPER
VERT. GAIN VERN
VERT. AMP. INPUT
+11V ON EXT. SYNC.
SCOPE BLKG. OUT
+200V IN
+12V OUT
CRT VERT DEFLECTION
CRT HORIZ. DEFLECTION
N.C.
VERT GAIN
CW
R65603
MAIN CIRCUIT BOARD
SCHEMATIC NO. 23-0612
P.C. BD. ASSY. NO. 23-0625
J65601
R10 100
R11 150
R12 750
S65601-C
S65601-B
+11V
L1 3.3µH
C13 .0015µf 80V MYLAR
C7 .0015µf 80V MYLAR
C8 6.8µf 35V tant
S65602-C

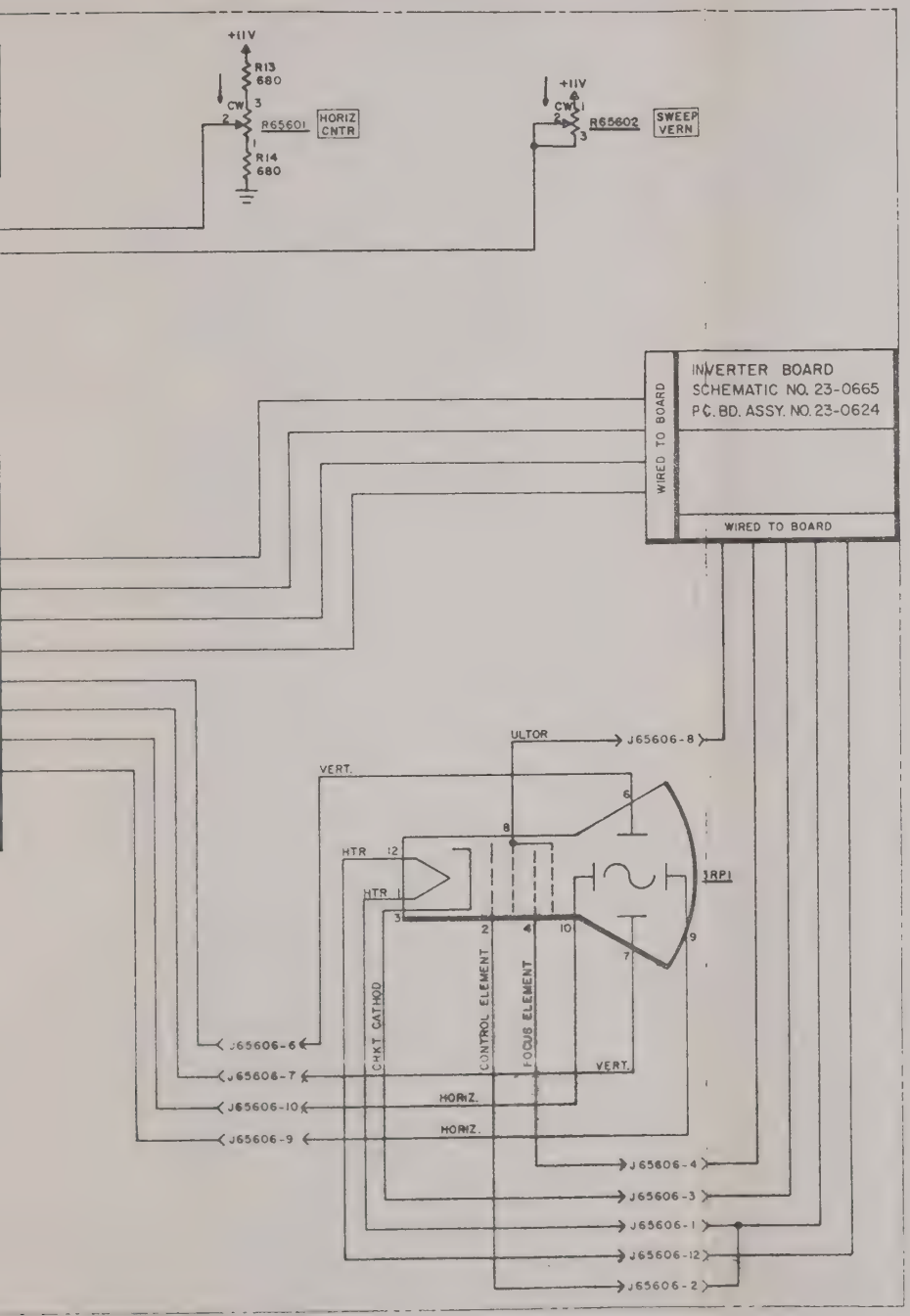

NOTES

1. TB-2 IS +11V CONSTANT TO PANEL CONTROLS.
2. ALL RESISTORS ARE 1/4 W., 10% TOLERANCE EXCEPT AS NOTED
3. # DENOTES 1/8 W., 5% TOLERANCE RESISTOR
4. ● DENOTES 1/4 W, 1% TOLERANCE RESISTOR

4-23-0703 SCOPE INTERCONNECT

SCOPE INTERCONNECT

D 4-23-0703

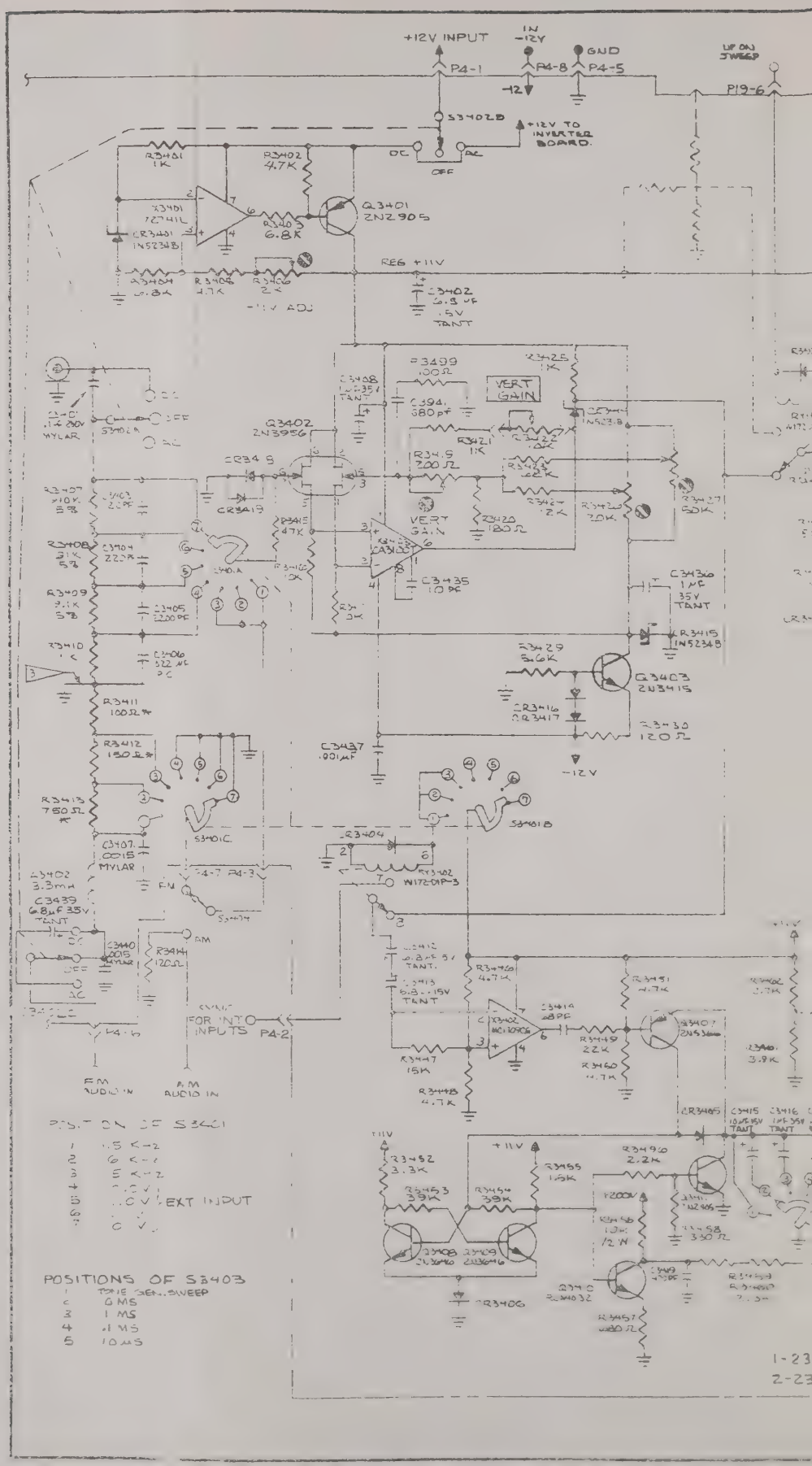
+12V INPUT
IN -12V
GND
P4-1
P4-8
P4-5
-12
S3402B
+12V TO INVERTER BOARD.
DC
AC
OFF
R3401 1K
R3402 4.7K
Q3401 2N2905
R3400 6.8K
CR3401 1N5234B
R3404 10.8K
R3405 4.7K
R3406 2K
-11V ADJ
REG +11V
C3402 6.8 µF .5V TANT
VERT GAIN
Q3402 2N3956
C3403 .12 200V MYLAR
S3402A
C3404 220PF
C3405 2200 PF
C3406 .022 µF
R3407 10K 5%
R3408 31K 5%
R3409 9.1K 5%
R3410 1K
R3411 100Ω
R3412 150Ω
R3413 750Ω
C3407 .0015 MYLAR
L3402 3.3mH
C3439 6.8µF 35V TANT
C3440 .0015 MYLAR
R3444 120Ω
FM
AM
S3401C
S3401B
S3404
P4-7 P4-3
P4-6
FM AUDIO IN
AM AUDIO IN
FOR INT. INPUTS
P4-2
POSITION OF S3401
1 .5 K-Z
2 6 K-Z
3 5 K-Z
4 .0 V
5 .0 V EXT INPUT
6 0 V
7 0 V
POSITIONS OF S3403
1 TONE GEN. SWEEP
2 0 MS
3 1 MS
4 .1 MS
5 10 µS
UP ON SWEEP
P19-6
R3499 .00Ω
C3408 10 35V TANT
C3494 680 pf
R3425 1K
CR3424 1N5238B
R3421 1K
R3422 20K
R3419 200Ω
R3423 22K
R3427 50K
R3420 180Ω
CR3418
CR3419
R3415 47K
R3416 2K
C3435 10 PF
C3436 1 µF 35V TANT
R3415 1N5234B
R3429 3.6K
Q3403 2N3415
CR3416 CR3417
R3430 120Ω
C3437 .001µF
-12V
CR3404
R3402 W172-01P-3
C3412 6.8µF 5V TANT
C3413 6.8 15V TANT
R3446 4.7K
R3451 4.7K
C3419 68PF
R3449 22K
R3460 4.7K
R3447 15K
R3448 4.7K
CR3405
C3415 10µF 35V TANT
C3416 1µF 35V TANT
+11V
R3452 3.3K
R3453 39K
R3454 39K
R3455 1.5K
R3456 2.2K
R3458 330Ω
R3457 680Ω
Q3408 2N3646
Q3409 2N3646
Q3410 2N4032
CR3406
1-23
2-23

DATE	REV	CHANGE	APPD
1-6-76	A	INC. ECN # 116 LD	
1-23-76	B	INC. ECN # 211 LD	
1-27-76	C	INC. ECN # 240 LD	
3/29/76	D	INCORPORATED ECN # 329	
5/18/76	E	INC ECN 566, 705, 724	
8-4-76	F	INCORP ECN # 881	
9-10-76	G	INCORP ECN # 991	
12-8-76	H	INCORP ECN # 1191	
3-3-76	J	INCORP. ECN # 1344	
4-8-76	K	INCORP. ECN # 1389	
7-12-76	L	INC ECN # 1583 # 1551	
11-5-76	M	INCORPORATED ECN # 1750 & 1645	
3/14/77	N	INC. ECN 1893	
3/17/78	P	INCORP ECN # 2713 & 238	
3/5/78	Q	INC. ECN # 2944	

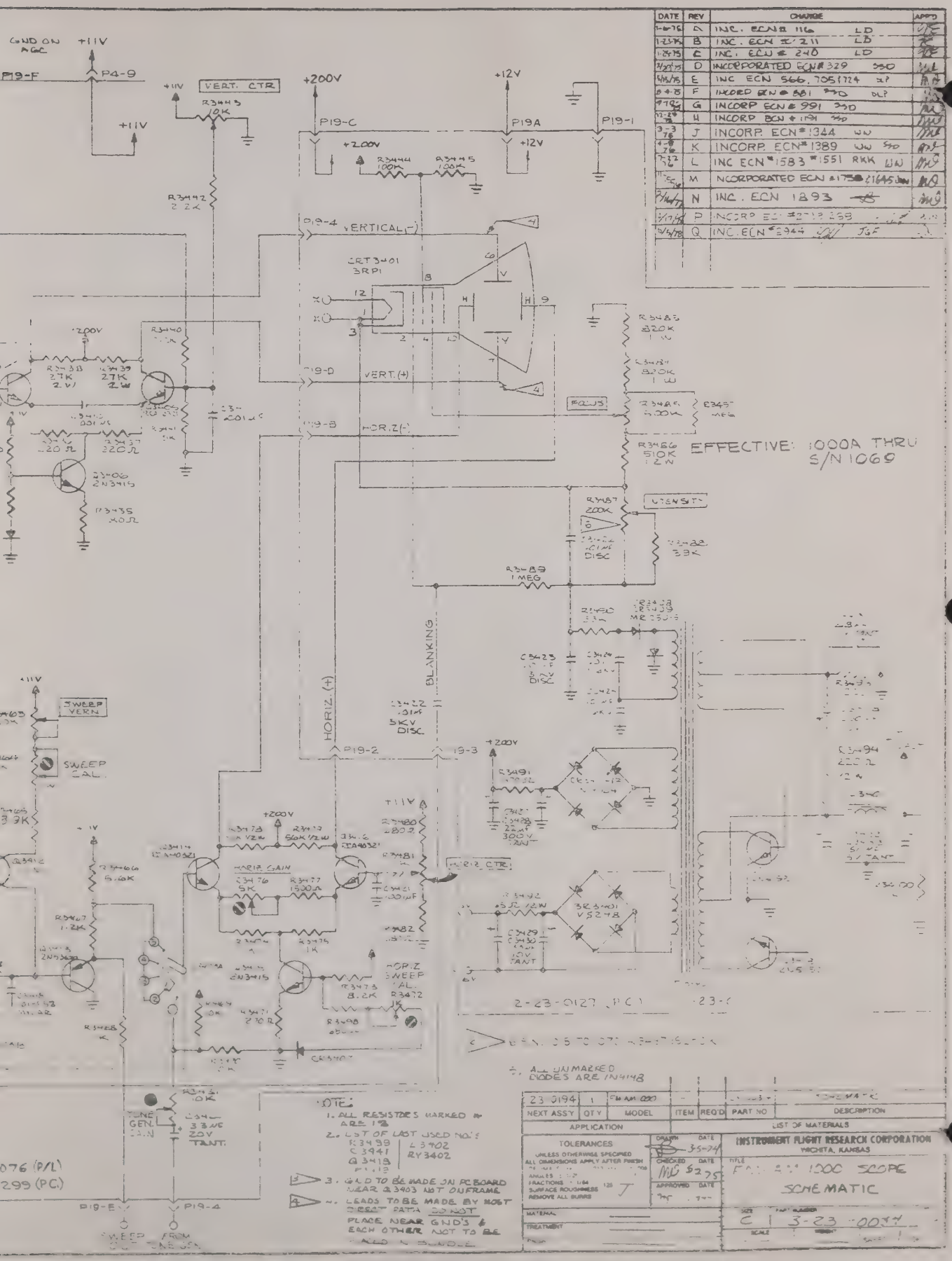

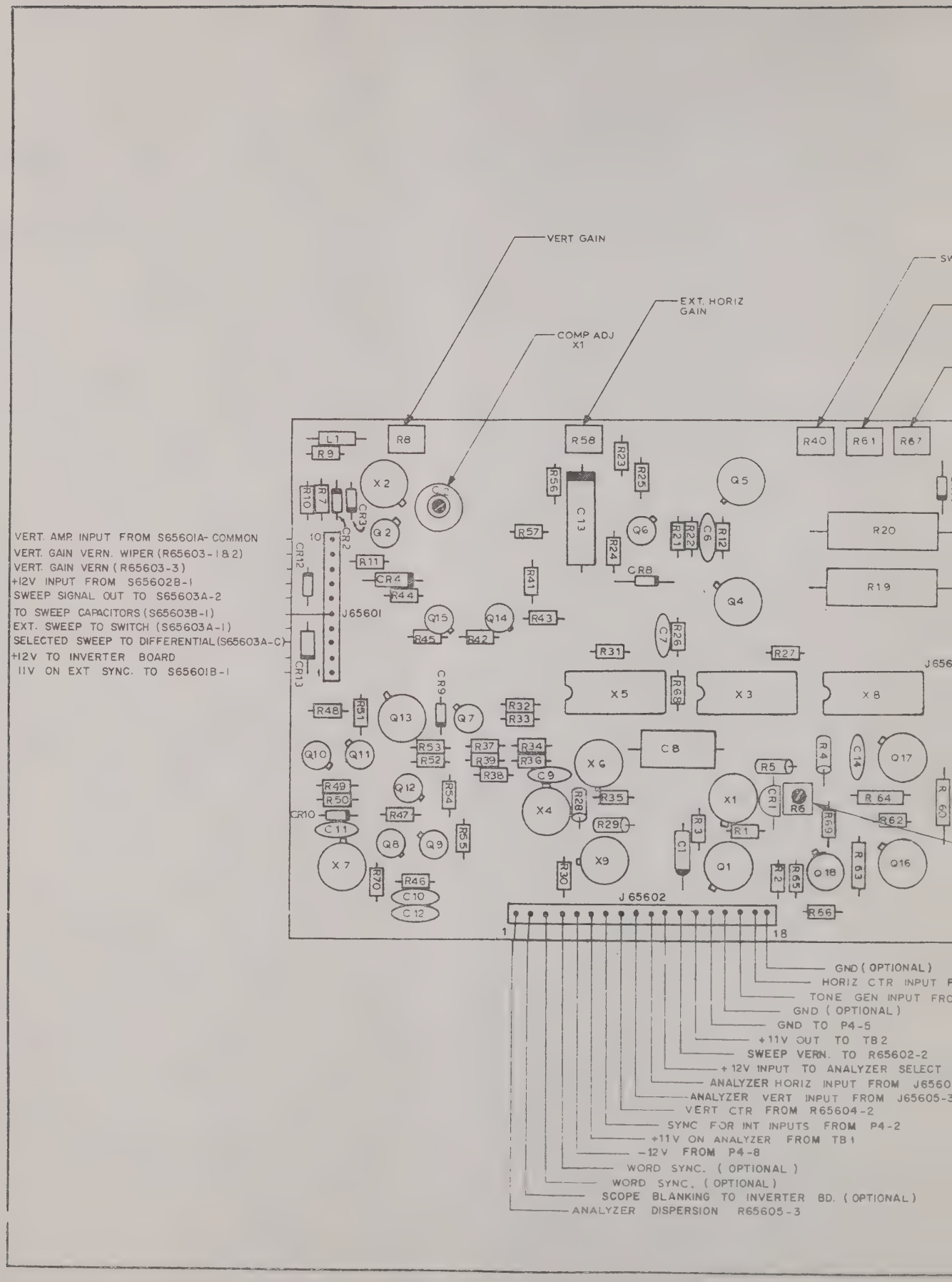
VERT GAIN
EXT. HORIZ GAIN
COMP ADJ X1
VERT. AMP. INPUT FROM S65601A- COMMON
VERT. GAIN VERN. WIPER (R65603-1 & 2)
VERT. GAIN VERN (R65603-3)
+12V INPUT FROM S65602B-1
SWEEP SIGNAL OUT TO S65603A-2
TO SWEEP CAPACITORS (S65603B-1)
EXT. SWEEP TO SWITCH (S65603A-1)
SELECTED SWEEP TO DIFFERENTIAL (S65603A-C)
+12V TO INVERTER BOARD
11V ON EXT SYNC. TO S65601B-1
J65601
J65602
GND (OPTIONAL)
HORIZ CTR INPUT
TONE GEN INPUT
GND (OPTIONAL)
GND TO P4-5
+11V OUT TO TB2
SWEEP VERN. TO R65602-2
+12V INPUT TO ANALYZER SELECT
ANALYZER HORIZ INPUT FROM J6560
ANALYZER VERT INPUT FROM J65605-3
VERT CTR FROM R65604-2
SYNC FOR INT INPUTS FROM P4-2
+11V ON ANALYZER FROM TB1
-12V FROM P4-8
WORD SYNC. (OPTIONAL)
WORD SYNC. (OPTIONAL)
SCOPE BLANKING TO INVERTER BD. (OPTIONAL)
ANALYZER DISPERSION R65605-3

DATE	REV	CHANGE	APP'D

CAL.

RIZ GAIN

HORIZ CURRENT

+ 200V FROM INVERTER BD.

GND (TO INVERTER BD.)

N.C.

CRT PIN 7(J65606-7) VERT DEFLECTION

NC

CRT PIN 6 (J65606-6) VERT DEFLECTION

+12V (TO INVERTER BD.)

CRT PIN 9 (J65606-9) HORIZ DEFLECTION

ANALYZER SWEEP & SCOPE BLANKING OUT TO INVERTER BD.

CRT PIN 10 (J65606-10) HORIZ DEFLECTION

+11V ADJ

R65601-2

4-4

5604-3)

EFFECTIVE: FM/AM1000A S/N 1070 & ON

ITEM	REQ'D	PART NO	DESCRIPTION

LIST OF MATERIALS

NEXT ASS'Y	QTY	MODEL	APPLICATION

TOLERANCES
UNLESS OTHERWISE SPECIFIED
ALL DIMENSIONS APPLY AFTER FINISH

DRAWN DATE
CHECKED DATE
APPROVED DATE

MATERIAL

FINISH

-IFR INC-
WICHITA KANSAS

TITLE SCOPE MAIN BOARD ASS'Y DWG

SIZE DWG NUMBER REV
3-1-1-52

SCALE WEIGHT SHEET OF

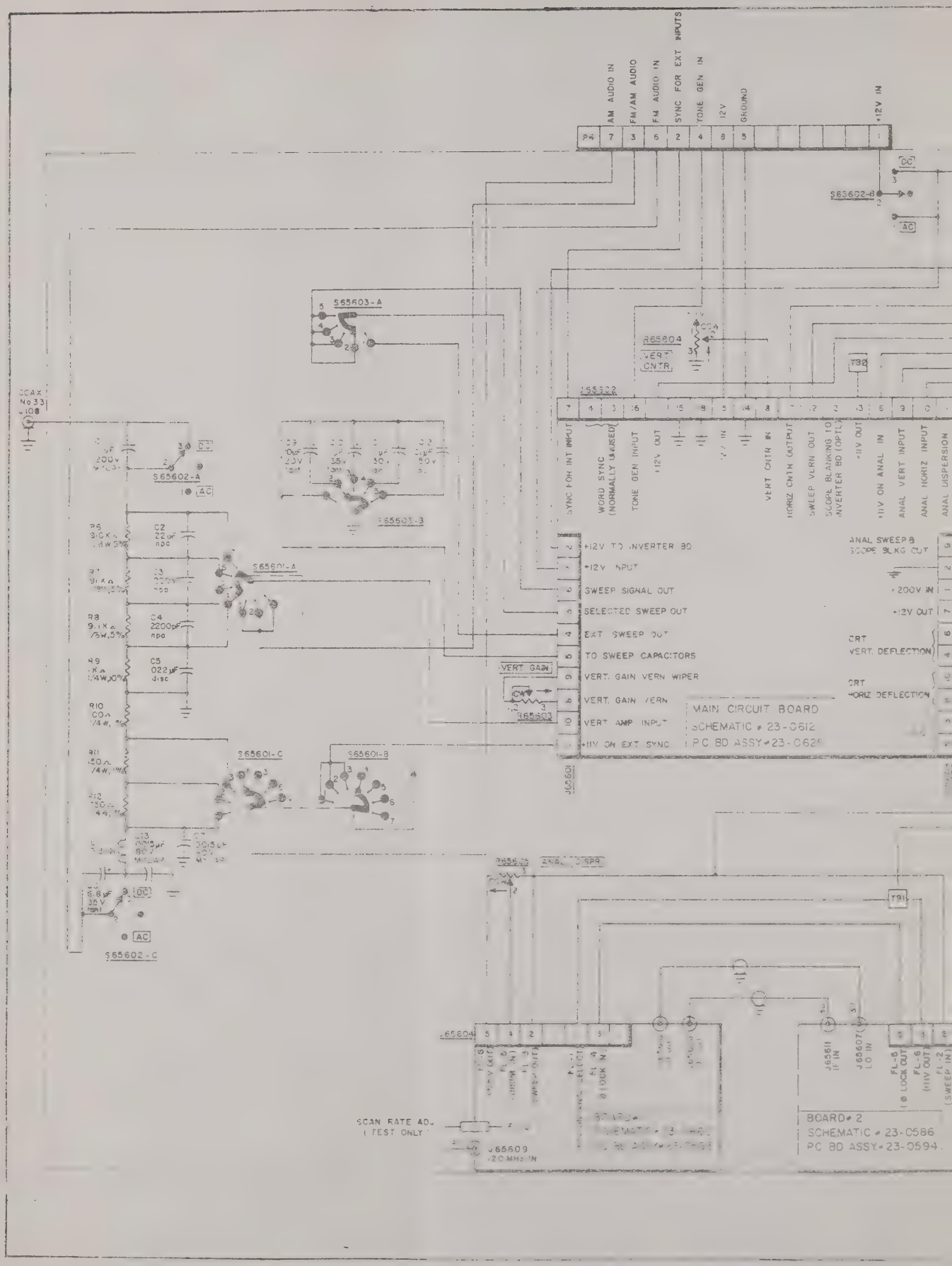
AM AUDIO IN
FM/AM AUDIO
FM AUDIO IN
SYNC FOR EXT INPUTS
TONE GEN IN
12V
GROUND
+12V IN
P4
DC
AC
S65602-B
S65603-A
R65604
VERT CNTR
T92
J65602
COAX No 33 J10
S65602-A
S65603-B
S65601-A
SYNC FOR INT INPUT
WORD SYNC (NORMALLY UNUSED)
TONE GEN INPUT
+12V OUT
VERT CNTR IN
HORIZ CNTR OUTPUT
SWEEP VERN OUT
SCOPE BLANKING TO INVERTER BD (OPTL)
+HV OUT
+HV ON ANAL IN
ANAL VERT INPUT
ANAL HORIZ INPUT
ANAL DISPERSION
+12V TO INVERTER BD
+12V INPUT
SWEEP SIGNAL OUT
SELECTED SWEEP OUT
EXT SWEEP OUT
TO SWEEP CAPACITORS
VERT. GAIN VERN WIPER
VERT. GAIN VERN
VERT AMP INPUT
+HV ON EXT SYNC
VERT GAIN
R65603
ANAL SWEEP & SCOPE BLKG OUT
+200V IN
+12V OUT
CRT VERT. DEFLECTION
CRT HORIZ DEFLECTION
MAIN CIRCUIT BOARD
SCHEMATIC # 23-0612
PC BD ASSY # 23-0625
J65601
S65601-C
S65601-B
S65602-C
R65605
ANAL DISPER
T91
J65604
J65611 IF IN
J65607 LO IN
FL-5 (@ LOCK OUT)
FL-6 (@HV OUT)
FL-2 (SWEEP IN)
SCAN RATE ADJ (TEST ONLY)
J65609 20 MHz IN
BOARD # 2
SCHEMATIC # 23-0586
PC BD ASSY # 23-0594

DATE	REV	CHANGE	APPD
[illegible]	A	INC ECN 2712	[illegible]
[illegible]	A	INC ECN 2788 A A	[illegible]
[illegible]	A	INC ECN 2753	[illegible]
7-5-78	B	INC ECN 3058	[illegible]

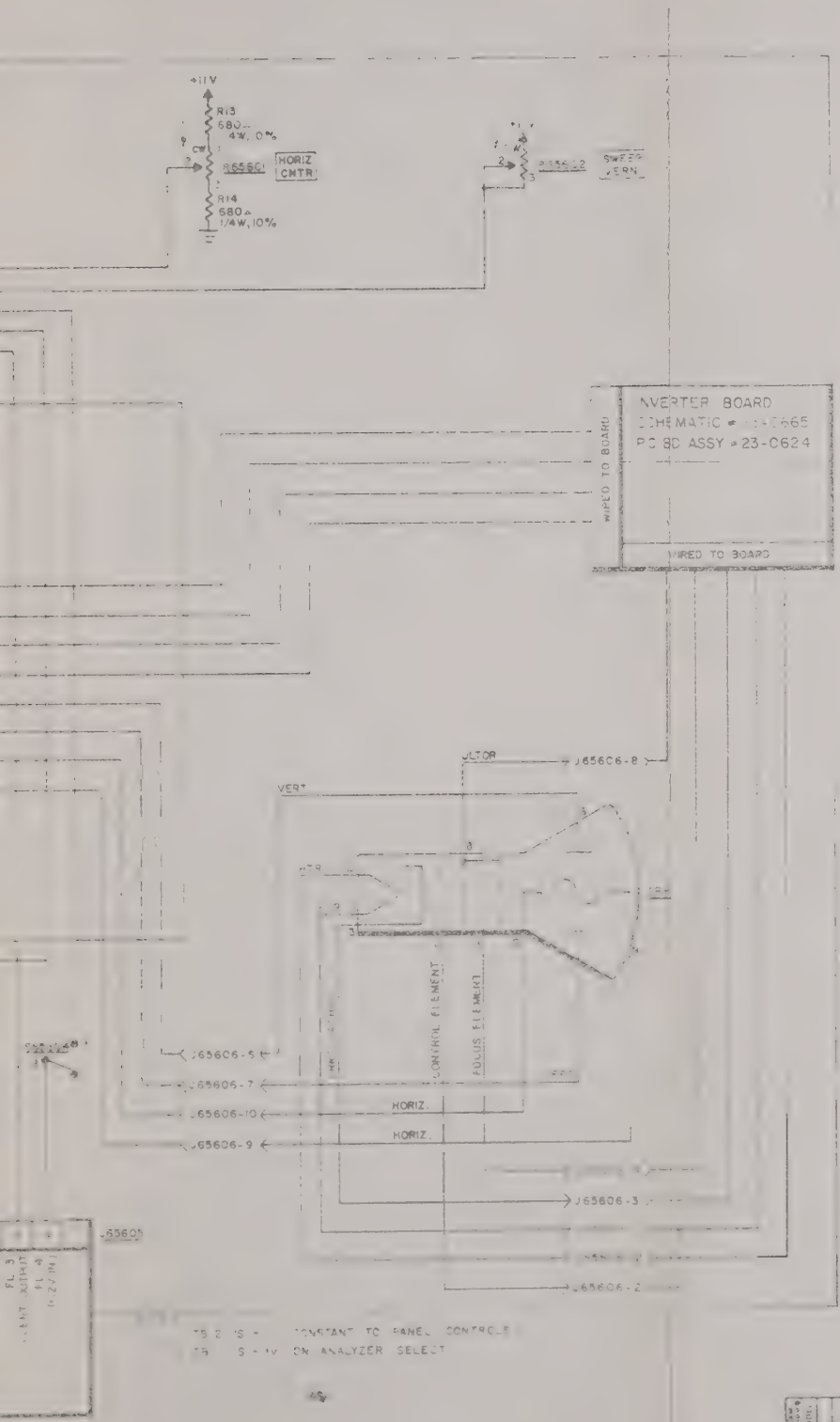

ITEM	REQ'D	PART NO.	DESCRIPTION
-	-	23-0656	SPECT. ANAL. INTERCONNECT

USED ON MATERIALS

TOLERANCES

- USR INC -
WICHITA KANSAS

SPECTRUM ANALYZER
INTERCONNECT
FM/AM-10005

D 4-23-0656 B

SHEET 1 OF 1

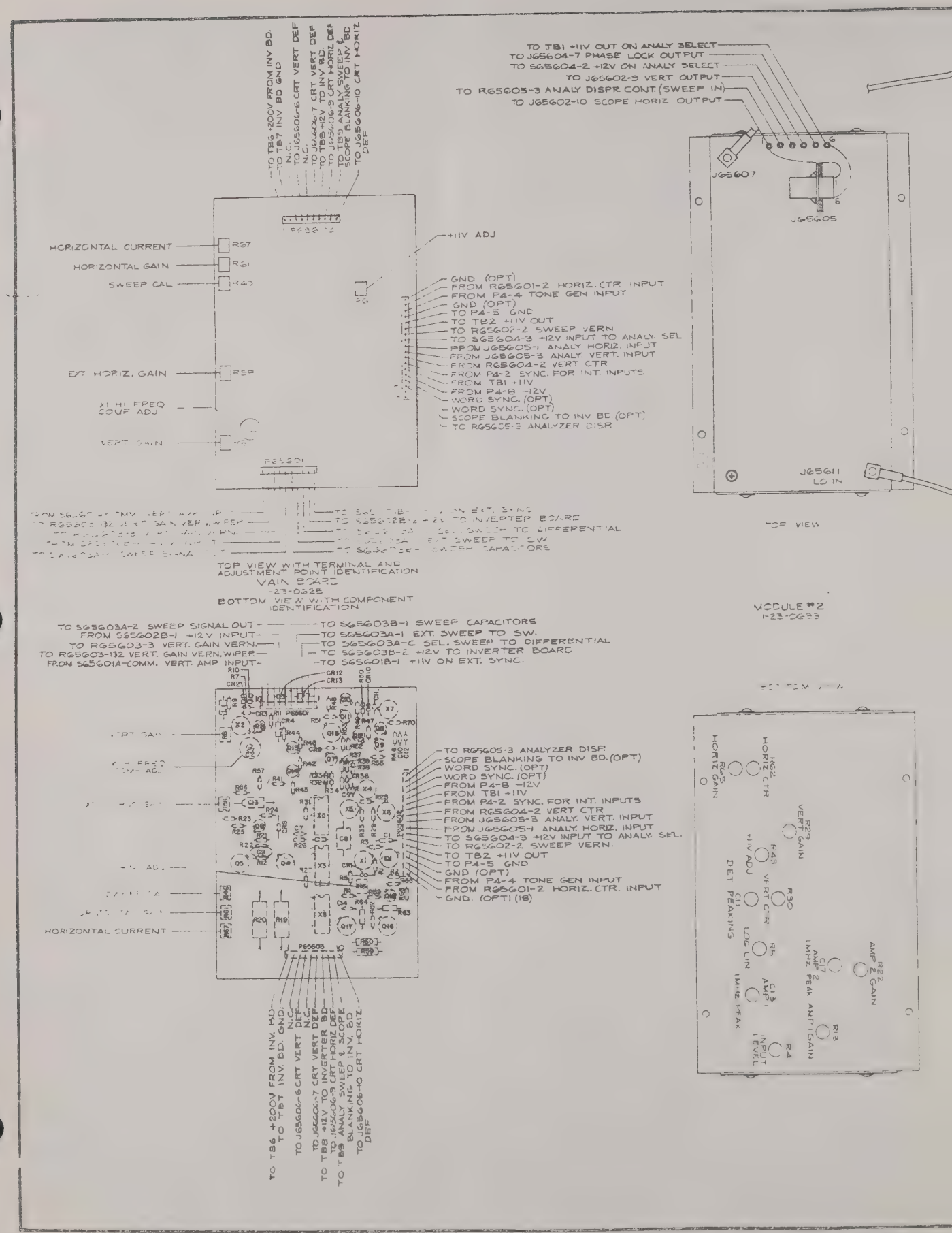
TO TB6 +200V FROM INV BD.
TO TB7 INV BD GND
N.C.
TO J6560-6 CRT VERT DEF
N.C.
TO J6560-7 CRT VERT DEF
TO TB8 +12V TO INV BD.
TO J6560-9 CRT HORIZ. DEF
TO TB9 ANALY. SWEEP & SCOPE BLANKING TO INV. BD.
TO J6560-10 CRT HORIZ. DEF
HORIZONTAL CURRENT
R67
HORIZONTAL GAIN
R61
SWEEP CAL
R40
+11V ADJ
EXT. HORIZ. GAIN
R59
X1 HI FREQ COUP ADJ
VERT GAIN
R42
GND (OPT)
FROM R6560-1-2 HORIZ. CTR. INPUT
FROM P4-4 TONE GEN INPUT
GND (OPT)
TO P4-5 GND
TO TB2 +11V OUT
TO R6560-2-2 SWEEP VERN
TO S6560-3 +12V INPUT TO ANALY. SEL
FROM J6560-1 ANALY. HORIZ. INPUT
FROM J6560-3 ANALY. VERT. INPUT
FROM R6560-2 VERT CTR
FROM P4-2 SYNC. FOR INT. INPUTS
FROM TB1 +11V
FROM P4-8 -12V
WORD SYNC. (OPT)
WORD SYNC. (OPT)
SCOPE BLANKING TO INV BD. (OPT)
TO R6560-3 ANALYZER DISP.
TOP VIEW WITH TERMINAL AND ADJUSTMENT POINT IDENTIFICATION
MAIN BOARD
1-23-0626
BOTTOM VIEW WITH COMPONENT IDENTIFICATION
TO INVERTER BOARD
TO DIFFERENTIAL
SWEEP CAPACITORS
TO S6560-3A-2 SWEEP SIGNAL OUT
FROM S6560-2B-1 +12V INPUT
TO R6560-3-3 VERT. GAIN VERN.
TO R6560-3-132 VERT. GAIN VERN. WIPER
FROM S6560-1A-COMM. VERT. AMP INPUT
TO S6560-3B-1 SWEEP CAPACITORS
TO S6560-3A-1 EXT. SWEEP TO SW.
TO S6560-3A-C SEL. SWEEP TO DIFFERENTIAL
TO S6560-3B-2 +12V TO INVERTER BOARD
TO S6560-1B-1 +11V ON EXT. SYNC.
TO R6560-3 ANALYZER DISP.
SCOPE BLANKING TO INV BD. (OPT)
WORD SYNC. (OPT)
WORD SYNC. (OPT)
FROM P4-8 -12V
FROM TB1 +11V
FROM P4-2 SYNC. FOR INT. INPUTS
FROM R6560-2 VERT CTR
FROM J6560-3 ANALY. VERT. INPUT
FROM J6560-1 ANALY. HORIZ. INPUT
TO S6560-3 +12V INPUT TO ANALY. SEL.
TO R6560-2 SWEEP VERN.
TO TB2 +11V OUT
TO P4-5 GND
GND (OPT)
FROM P4-4 TONE GEN INPUT
FROM R6560-1-2 HORIZ. CTR. INPUT
GND. (OPT) (18)
HORIZONTAL CURRENT
TO TB6 +200V FROM INV. BD.
TO TB7 INV. BD. GND.
N.C.
TO J6560-6 CRT VERT DEF
N.C.
TO J6560-7 CRT VERT DEF
TO TB8 +12V TO INVERTER BD
TO J6560-9 CRT HORIZ. DEF
TO TB9 ANALY. SWEEP & SCOPE BLANKING TO INV. BD.
TO J6560-10 CRT HORIZ. DEF
TO TB1 +11V OUT ON ANALY SELECT
TO J6560-7 PHASE LOCK OUTPUT
TO S6560-2 +12V ON ANALY SELECT
TO J6560-9 VERT OUTPUT
TO R6560-3 ANALY DISPR. CONT. (SWEEP IN)
TO J6560-10 SCOPE HORIZ. OUTPUT
J6560-7
J6560-5
J6560-11 LO IN
TOP VIEW
MODULE #2
1-23-0633
HORIZ GAIN
R63
HORIZ CTR
R62
VERT GAIN
R29
+11V ADJ
R43
VERT CTR
R30
DET. PEAKING
C11
LOG LIN
R5
IMPZ PEAK
C13
AMP 1
IMPZ PEAK
C17
AMP 2
R22
AMP 2 GAIN
R13
AMP 1 GAIN
R4
INPUT LEVEL

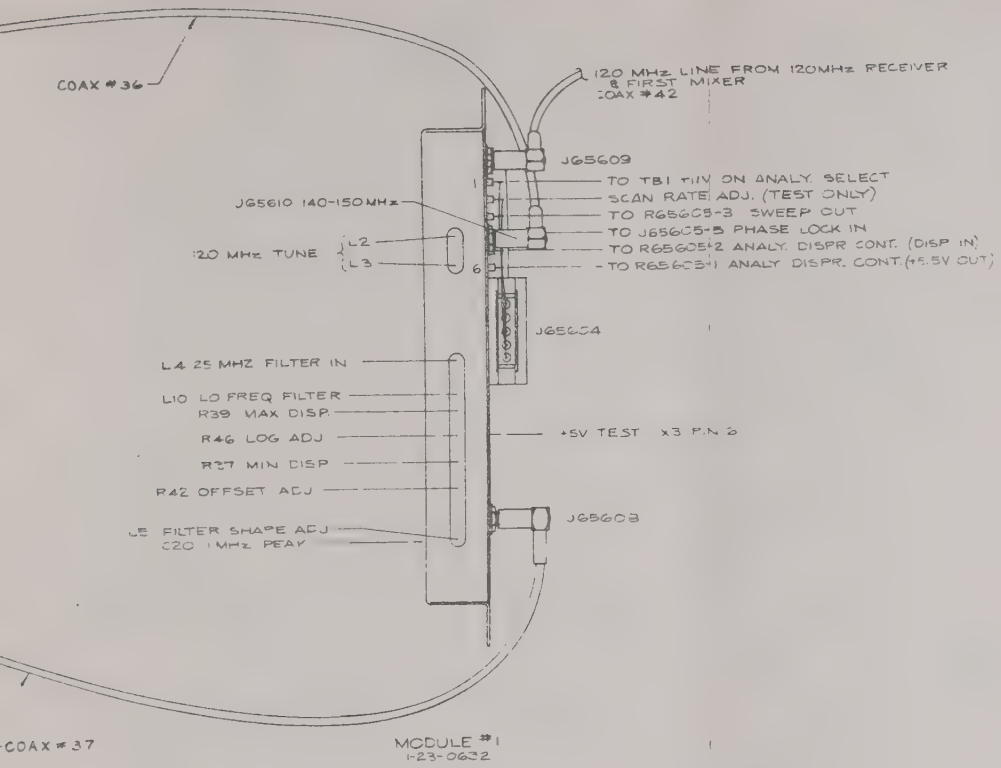

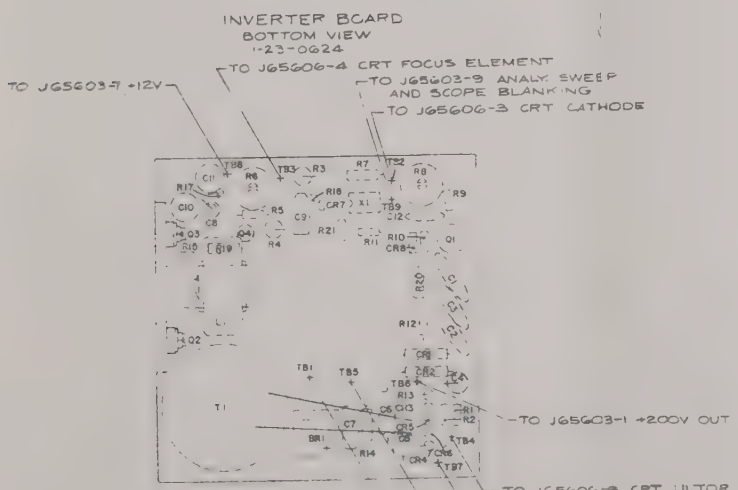

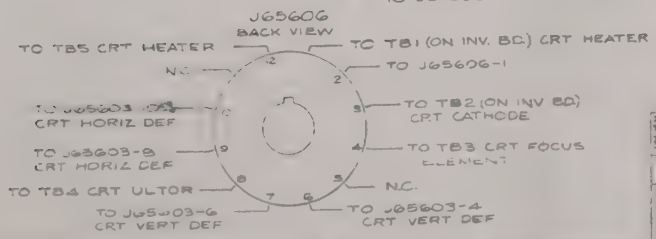

SPECTRUM ANALYZER TEST INTERCONNECT

4 23-0676 A

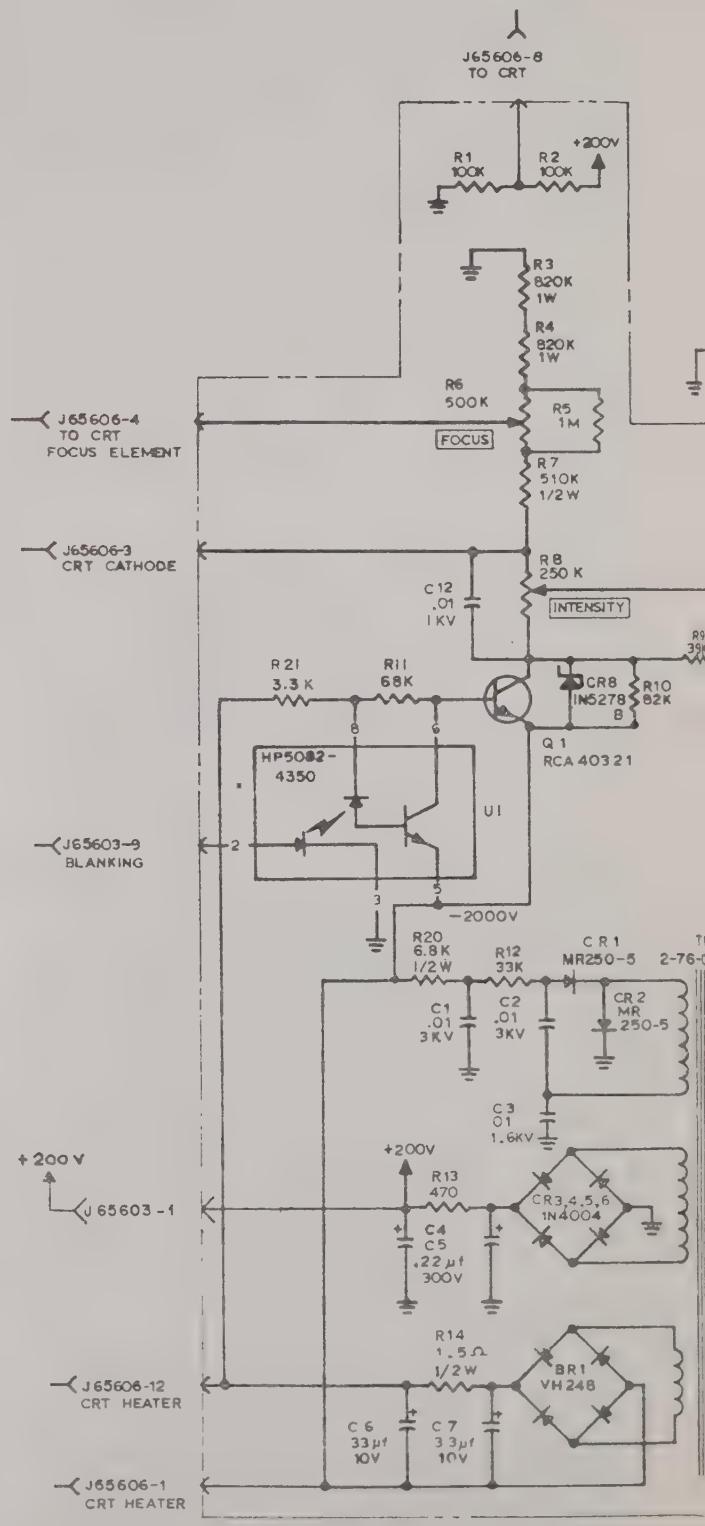
J65606-8
TO CRT
R1
100K
R2
100K
+200V
R3
820K
1W
R4
820K
1W
R6
500K
R5
1M
J65606-4
TO CRT
FOCUS ELEMENT
FOCUS
R7
510K
1/2W
J65606-3
CRT CATHODE
R8
250 K
C12
.01
1 KV
INTENSITY
R21
3.3 K
R11
68K
CR8
1N5278
8
R10
82K
Q1
RCA 40321
HP5082-
4350
U1
J65603-9
BLANKING
-2000V
R20
6.8K
1/2W
R12
33K
CR1
MR250-5
C1
.01
3KV
C2
.01
3KV
CR2
MR
250-5
C3
01
1.6KV
+200 V
J65603-1
+200V
R13
470
C4
C5
.22 µf
300V
CR3,4,5,6
1N4004
R14
1.5Ω
1/2W
J65606-12
CRT HEATER
BR1
VH248
C6
33µf
10V
C7
33µf
10V
J65606-1
CRT HEATER

DATE	REV	CHANGE	APP'D
8/4/77	A	INCORP. ECN # 2214 LC	
8/6/77	B	INCORP. ECN # 2330 LC	
8/27/77	C	INCORP. ECN # 2430 LC	

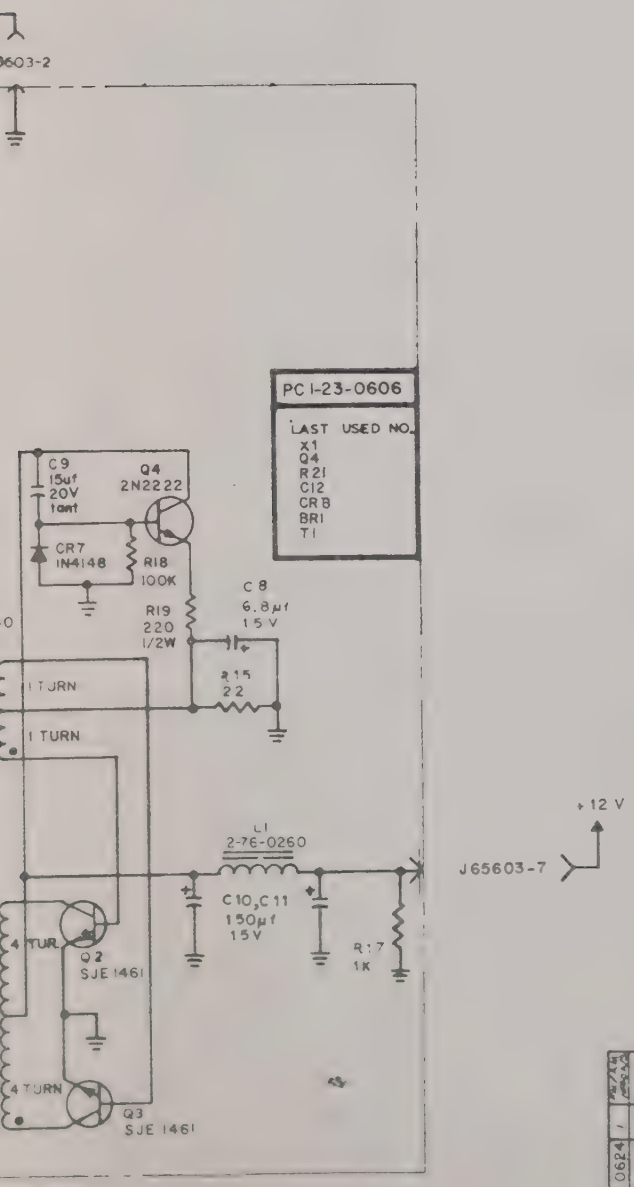

EFFECTIVE: FM/AM1000A S/N 1070 & ON

ITEM	REQ'D	PART NO	DESCRIPTION

LIST OF MATERIALS

TOLERANCES
UNLESS OTHERWISE SPECIFIED
ALL DIMENSIONS APPLY AFTER FINISH
ANGLES ± 1/2°
FRACTIONS ± 1/64
SURFACE ROUGHNESS 125
REMOVE ALL BURRS

DRAWN LD 7/15/77
CHECKED
APPROVED

-IFR INC-
WICHITA KANSAS

INVERTER BOARD
SCHEMATIC FOR THE
SPECTRUM ANALYZER

SIZE C | PART NUMBER 3-23-0665 | REV C

MATERIAL
FINISH
SCALE | WEIGHT | SHEET

23-0624 | 1 | FM/AM 1000A
NEXT ASSY | QTY | MODEL
APPLICATION

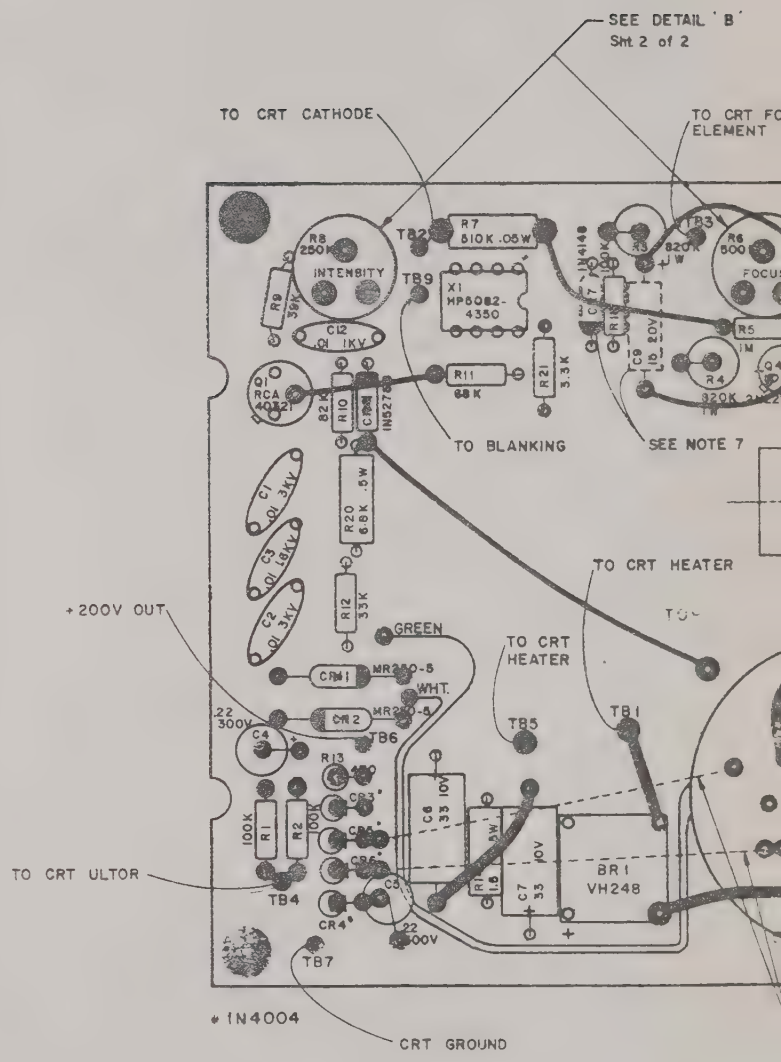
SEE DETAIL 'B'
Sht 2 of 2
TO CRT CATHODE
TO CRT FO
ELEMENT
R8
250K
INTENSITY
TB2
R7
510K .05W
TB3
R6
500
FOCUS
R9
39K
TB9
X1
MP5082-
4350
C12
.01 1KV
R11
68K
R21
3.3K
R5
1M
R4
820K
1W
RCA
40321
82K
R10
C2
1N5276
TO BLANKING
SEE NOTE 7
C1
.01 3KV
R20
6.8K .5W
C3
.01 1.8KV
C2
.01 3KV
R12
33K
TO CRT HEATER
+200V OUT
GREEN
TO CRT
HEATER
CR1
MR250-5
WHT.
CR2
MR250-5
.22
300V
C4
TB6
TB5
TB1
R13
100K
R1
R2
100K
C6
33 10V
R1
1.6
C7
33
10V
BR1
VH248
TO CRT ULTOR
TB4
CR4*
C5
.22
300V
TB7
* 1N4004
CRT GROUND

8/31/77	D	REVISED & REDRAWN LC	MD
7/23/77	E	INCORP. ECN # 2389 JMW	MD
11/17/77	F	INCORP. ECN # 2430 LC	MD
9/15/77	G	INCORP ECN # 2468 LC	MD
9/27/77	H	INCORP. ECN # 2498 & 2525 LC	MD
1/29/78	J-1	INC. ECN # 2727 A.A.	WW
5-22-78	J-2	INC. ECN 2888 JAT	WW

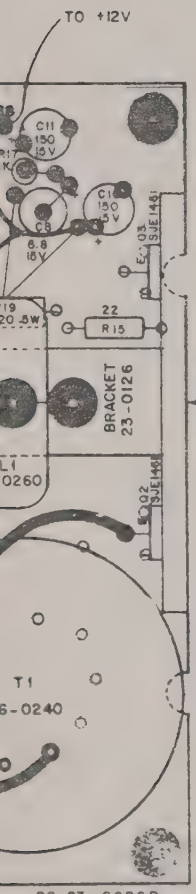

SEE DETAIL 'A'
Sht. 2 of 2

PC 23-0606D
SCHEMATIC 3-23-0665
INSTALL JUMPERS ON BACK OF P.C. BD. AS SHOWN

NOTES:

1. ALL RESISTORS ARE 1/4 W., 10% TOLERANCE EXCEPT AS NOTED.
2. ALL CAPACITOR VALUES ARE IN μF EXCEPT AS NOTED.
3. COMPONENT LEADS MAY EXTEND .04 TO .06 BEYOND BOTTOM OF BOARD AFTER SOLDERING.
4. REFER TO SHEET 2 OF 2 FOR PLUG WIRING & DETAIL INFORMATION.
5. ALL RESISTOR VALUES ARE IN Ω EXCEPT AS NOTED.
6. BOTTOM OF BOARD TO BE COATED WITH "HUMISEAL" / EQUIV. TYPE 1A76 LIQUID INSULATION.
7. PLACE COMPONENT FLAT ON BACK SIDE OF P.C. BOARD.

EFFECTIVE: FM/AM1000A S/N 1070 & ON

ITEM	REQ'D	PART NO	DESCRIPTION

LIST OF MATERIALS

23-0626 NEXT ASSY	1 QTY	MODEL	APPLICATION

TOLERANCES
UNLESS OTHERWISE SPECIFIED
ALL DIMENSIONS APPLY AFTER FINISH
DECIMALS .XX = ± .010 .XXX = ± .005
ANGLES ± 1°
FRACTIONS ± 1/64
SURFACE ROUGHNESS 125
REMOVE ALL BURRS

DRAWN LC DATE 8/31/77
CHECKED DATE
APPROVED MD DATE 5/77

MATERIAL: See L/M
FINISH

- IFR INC -
WICHITA KANSAS

TITLE: SPECT. ANAL INVERTER PC BOARD ASSY
FM/AM-1000 S

SIZE C | PART NUMBER 3-23-0624 | REV
SCALE 2 X | WEIGHT | SHEET OF 2

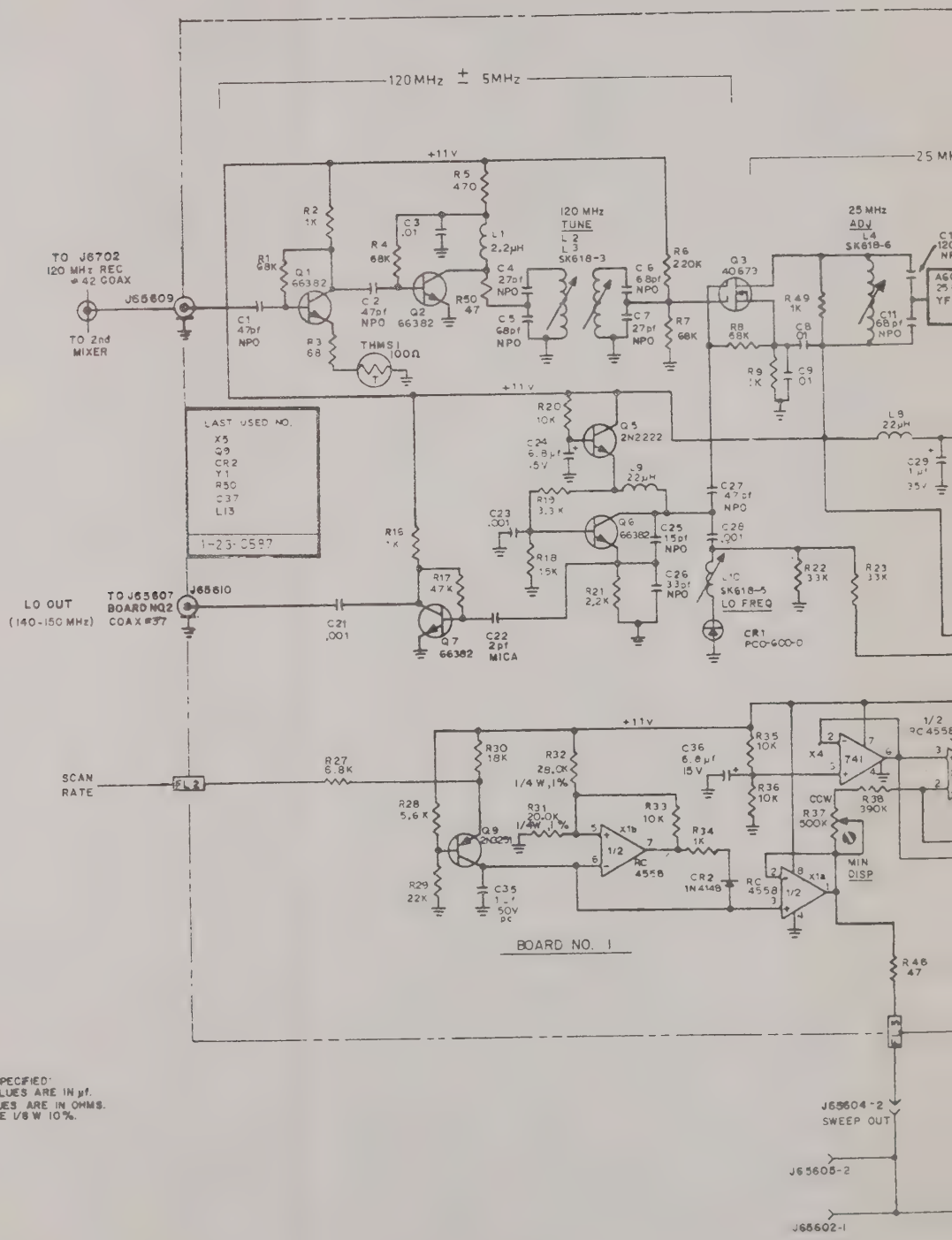

NOTES:

1. UNLESS OTHERWISE SPECIFIED:
   A. ALL CAPACITOR VALUES ARE IN μf.
   B. ALL RESISTOR VALUES ARE IN OHMS.
   C. ALL RESISTORS ARE 1/8 W 10%.

REV		REVISIONS	
	A	INCORP ECN # 2368 LC	
4-27-77	B	INC ECN 2838 TJT	
4-27-77	C	INC ECN's 2753, 2826	
7-5-78	D	INC ECN 3058 TJT	

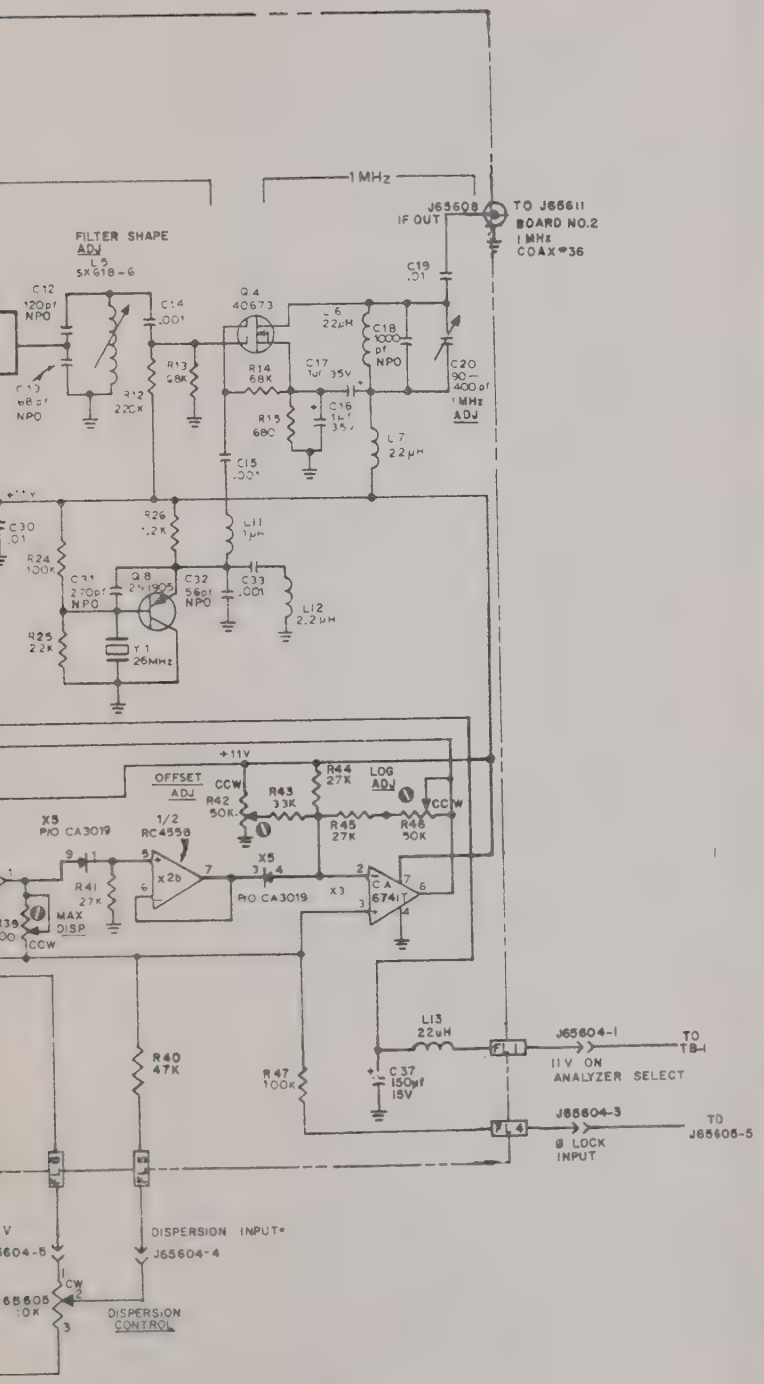

ITEM	REQ'D	PART NO	DESCRIPTION

LIST OF MATERIALS

TOLERANCES
UNLESS OTHERWISE SPECIFIED
ALL DIMENSIONS APPLY AFTER FINISH
DECIMALS ±
FRACTIONS ±
ANGULARITY ±
SURFACE ROUGHNESS 125
REMOVE ALL BURRS

TJT 6-16-77

-HP INC-
MONTA KANSAS

SPECTRUM ANALYZER
BOARD NO.1 SCHEMATIC

SIZE D
4-33-0680
REV 7
SHEET 1 OF 1

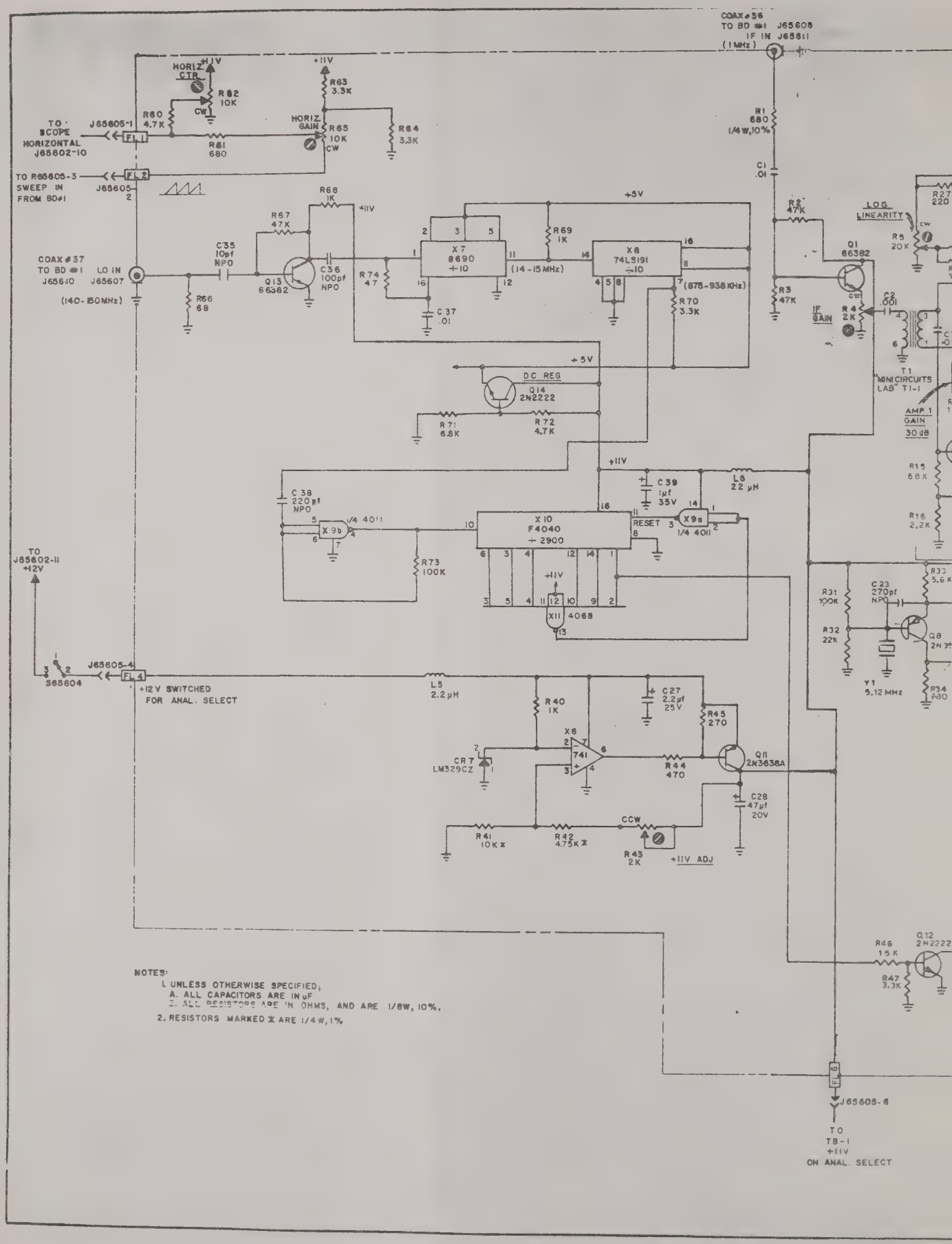

NOTES:

1. UNLESS OTHERWISE SPECIFIED;
   A. ALL CAPACITORS ARE IN µF
   B. ALL RESISTORS ARE IN OHMS, AND ARE 1/8W, 10%.
2. RESISTORS MARKED ✱ ARE 1/4W, 1%

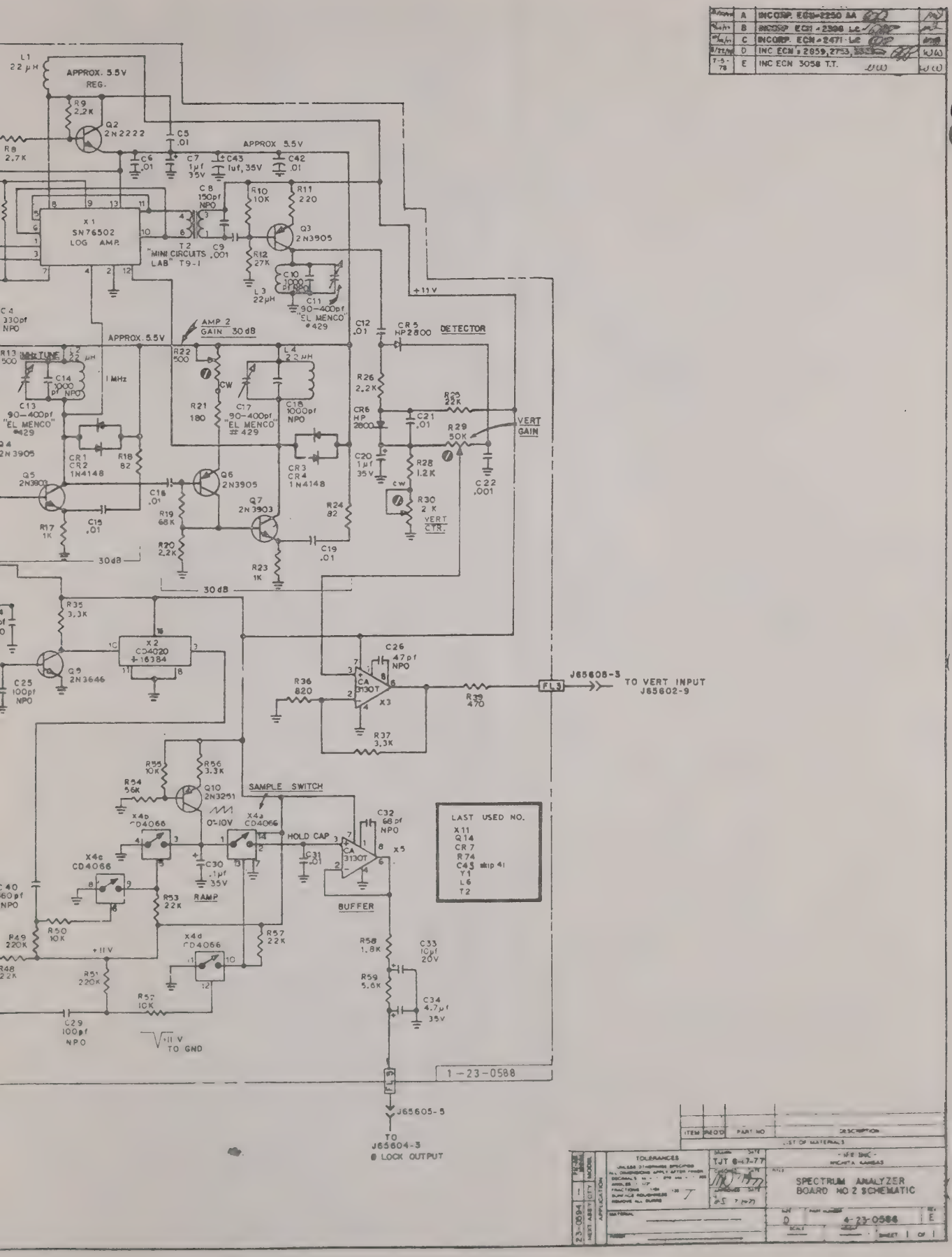
A INCORP. ECN-2250 AA
B INCORP. ECN-2308 LC
C INCORP. ECN-2471 LE
D INC ECN's 2659, 2753, 3
E INC ECN 3058 T.T.
L1 22 µH
APPROX. 5.5V REG.
R9 2.2K
Q2 2N2222
R8 2.7K
C5 .01
C6 .01
C7 1µf 35V
C43 1uf, 35V
C42 .01
APPROX 5.5V
X1 SN76502 LOG AMP.
C8 150pf NPO
T2 "MINI CIRCUITS LAB" T9-1
C9 .001
R10 10K
R11 220
Q3 2N3905
R12 27K
C10 1000 pf NPO
L3 22µH
C11 90-400pf "EL MENCO" #429
+11V
C4 330pf NPO
APPROX. 5.5V
AMP 2 GAIN 30dB
R22 500
L4 22µH
C12 .01
CR5 HP2800
DETECTOR
R13 500
1MHz TUNE
L2 22 µH
C14 1000 pf NPO
1 MHz
C13 90-400pf "EL MENCO" #429
R21 180
C17 90-400pf "EL MENCO" #429
C18 1000pf NPO
R26 2.2K
R25 22K
CR6 HP 2800
C21 .01
R29 50K
VERT GAIN
Q4 2N3905
CR1 CR2 1N4148
R18 82
CR3 CR4 1N4148
C20 1µf 35V
R28 1.2K
C22 .001
Q5 2N3903
C16 .01
Q6 2N3905
Q7 2N3903
R30 2K
VERT CTR.
R17 1K
C15 .01
R19 68K
R24 82
R20 2.2K
C19 .01
R23 1K
30dB
30dB
R35 3.3K
X2 CD4020 + 16384
Q9 2N3646
C25 100pf NPO
C26 47pf NPO
R36 820
X3 CA 3130T
R39 470
J65608-3
TO VERT INPUT J65602-9
R37 3.3K
R55 10K
R56 3.3K
R54 56K
Q10 2N3251
SAMPLE SWITCH
0-10V
X4b CD4066
X4a CD4066
HOLD CAP
C32 68pf NPO
X5 CA 3130T
X4c CD4066
C30 .1µf 35V
C31 .01
R53 22K
RAMP
BUFFER
R50 10K
R49 220K
R57 22K
R58 1.8K
C33 10µf 20V
X4d CD4066
+11V
R51 220K
R59 5.6K
C34 4.7µf 35V
R52 10K
C29 100pf NPO
-11V TO GND
LAST USED NO.
X11
Q14
CR7
R74
C45 skip 41
Y1
L6
T2
1-23-0588
J65605-5
TO J65604-3 ⊕ LOCK OUTPUT
TOLERANCES
TJT 6-17-77
SPECTRUM ANALYZER BOARD NO 2 SCHEMATIC
D
4-23-0586
E
SHEET 1 OF 1

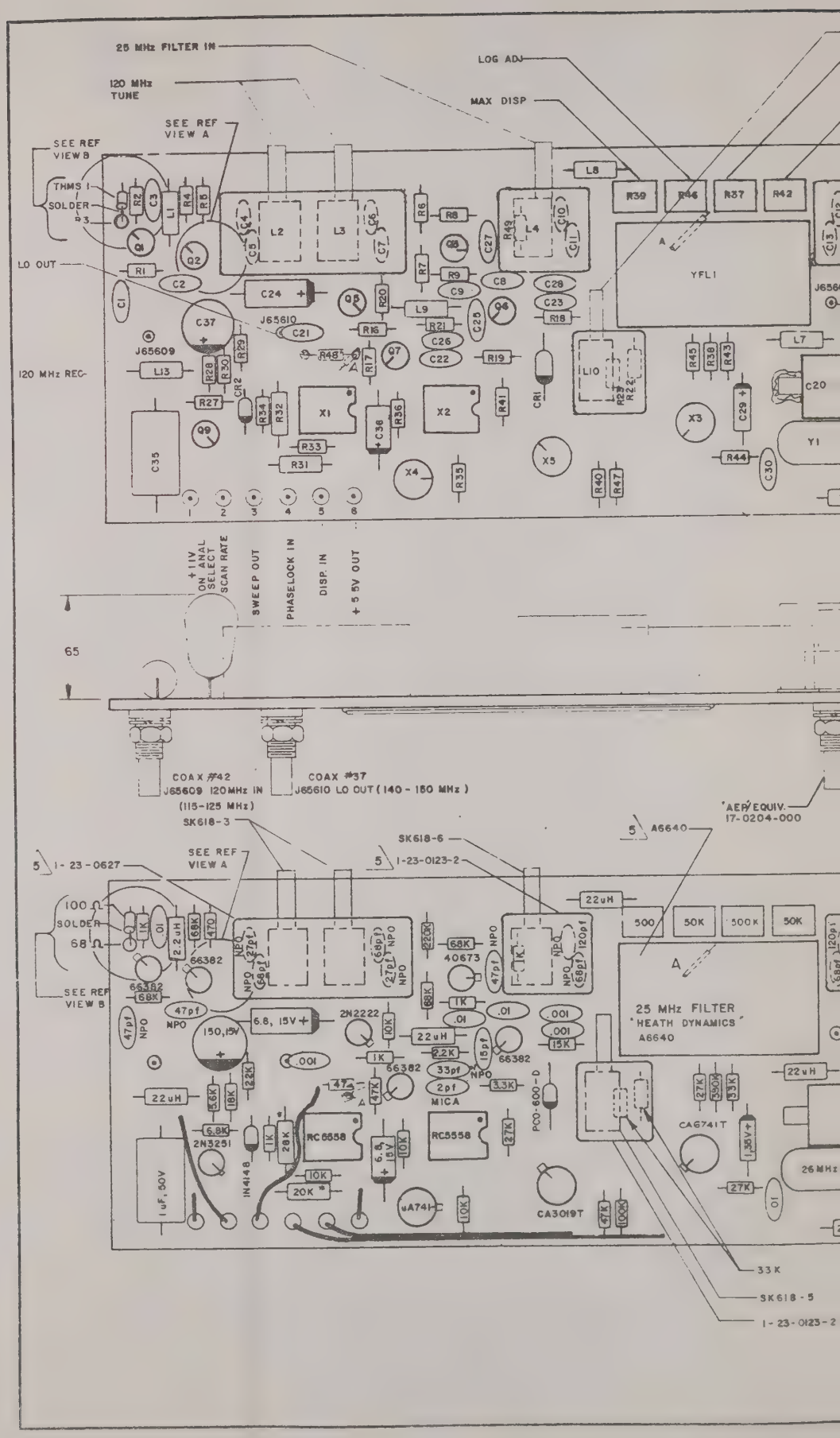
25 MHz FILTER IN
120 MHz TUNE
LOG ADJ
MAX DISP
SEE REF VIEW A
SEE REF VIEW B
THMS 1
SOLDER
R3
LO OUT
120 MHz REC
J65609
J65610
YFL1
Y1
+11V
ON ANAL SELECT
SCAN RATE
SWEEP OUT
PHASELOCK IN
DISP. IN
+5V OUT
65
COAX #42
J65609 120MHz IN
(115-125 MHz)
COAX #37
J65610 LO OUT (140 - 150 MHz)
SK618-3
SK618-6
1-23-0627
1-23-0123-2
A6640
AER EQUIV. 17-0204-000
100
68
SOLDER
SEE REF VIEW B
25 MHz FILTER
"HEATH DYNAMICS"
A6640
26 MHz
33K
SK618-5
1-23-0123-2

DATE	REV	CHANGE	APP'D
4-1-77	A	INCORP. ECN # 2271 WC WW	MD
8/9/77	B	INCORP ECN # 2365 WC	MD
2/8/77	C	INC ECN # 2638 2530 JA	MD
2-25-77	C-1	INC ECN 2826 JA	MD
7-5-78	C-2	INC. ECN 3058 T.T. WW	WW

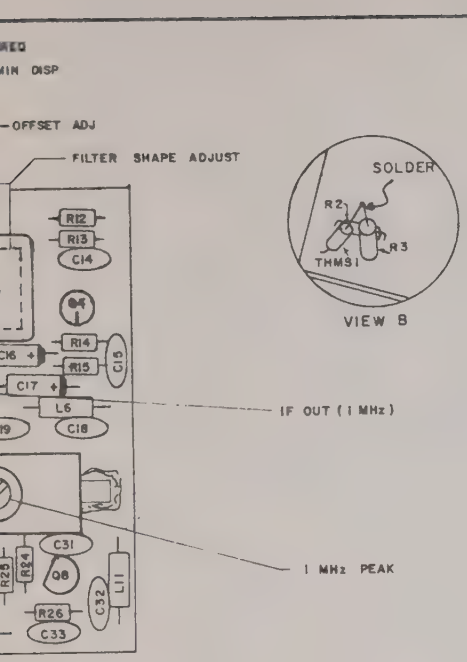

NOTES:

1. ALL RESISTORS ARE 1/8 W., 10% TOLERANCE EXCEPT AS NOTED.
2. ALL CAPACITOR VALUES ARE IN µF EXCEPT AS NOTED.
3. COMPONENT LEADS MAY EXTEND .04 TO .06 BEYOND BOTTOM OF BOARD AFTER SOLDERING.
4. MAXIMUM HEIGHT OF COMPONENTS TO BE .65 FROM COMPONENT SIDE OF BOARD.
5. ALL RF SHIELDS TO BE COMPLETELY SOLDERED, ALL SIDES.
6. ALL JUMPERS TO BE AWG 24
7. REF DWG: SCHEMATIC 4-23-0660
8. * (ASTERISK) DENOTES ± 1% RESISTOR TOLERANCE 1/4 W

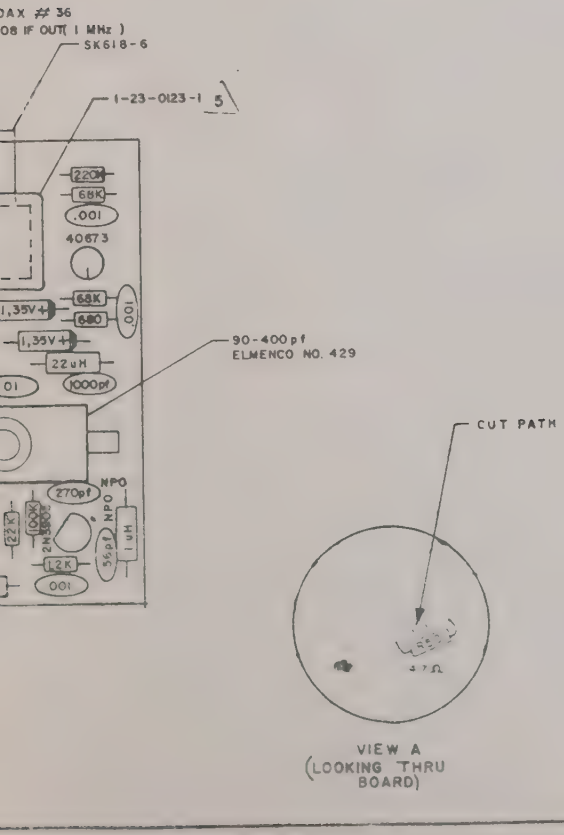

ITEM	REQ'D	PART NO.	DESCRIPTION

LIST OF MATERIALS

FSA 1000-26	1	23-626	NEXT ASSY
QTY	MODEL	APPLICATION	

TOLERANCES
UNLESS OTHERWISE SPECIFIED
ALL DIMENSIONS APPLY AFTER FINISH
ANGLES ± 1/2°
FRACTIONS ± 1/64
SURFACE ROUGHNESS 125
REMOVE ALL BURRS

DRAWN 4/20/77
CHECKED 5-4-77
APPROVED 5-5-77

-IFR INC-
WICHITA, KANSAS

TITLE
SPECTRUM ANALYZER
PC BD ASSY
BD NO 1

MATERIAL
FINISH

SIZE C
PART NUMBER 3-23-0593
REV C-2
SCALE 2/1
WEIGHT
SHEET 1 OF 1

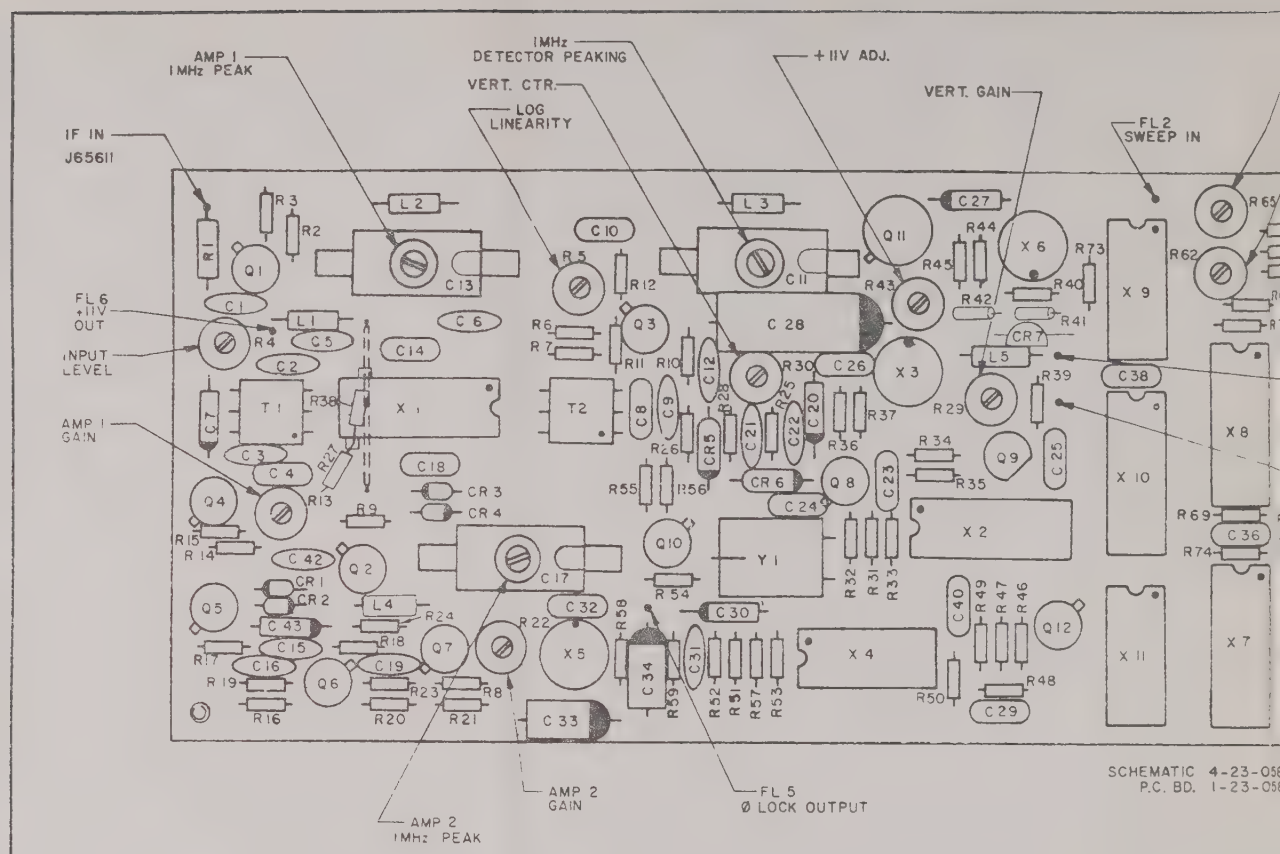

SCHEMATIC 4-23-05
P.C. BD. 1-23-05

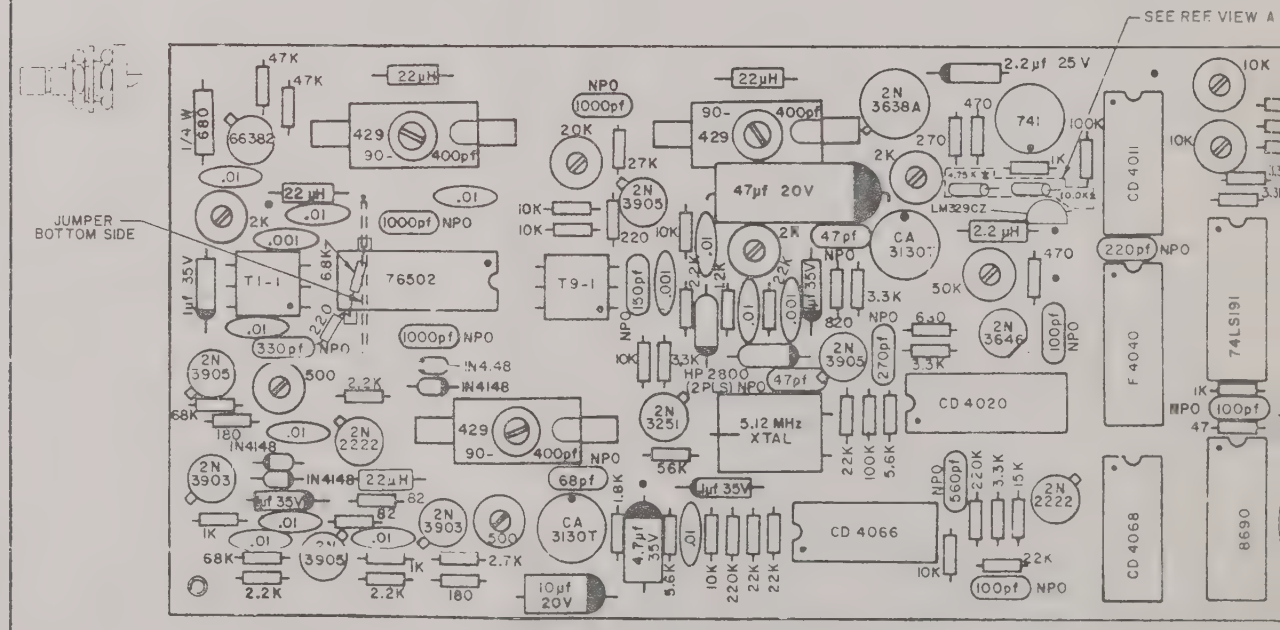

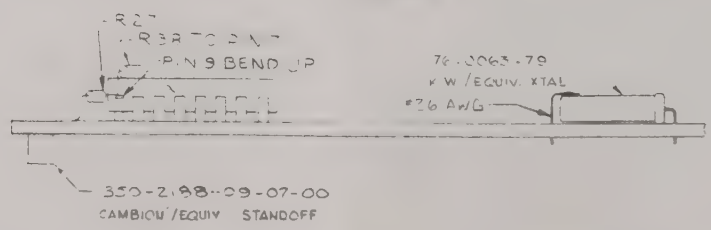

NOTES:

1. ALL RESISTORS ARE 1/8 W.,
2. ALL CAPACITOR VALUES ARE
3. COMPONENT LEADS MAY EXTE
   BOARD AFTER SOLDERING.
4. MAXIMUM HEIGHT OF COMPO
   SIDE OF BOARD.
5. RESISTORS MARKED WITH AST

DATE	REV	CHANGE	APP'D
[illegible]	A	UPDATE REV. LETTER AA	[illegible]
[illegible]	B	INCORP ECN # [illegible]	[illegible]
[illegible]	C	INCORP ECN # 2383	[illegible]
[illegible]	D	INCORP ECN # 2471	[illegible]
[illegible]	E	INCORP. ECN # 2538 AA	[illegible]
[illegible]	E-1	[illegible] ECN [illegible]	
[illegible]	E	[illegible]	

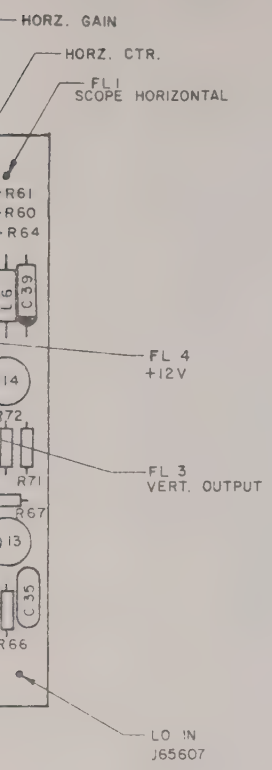

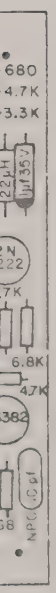

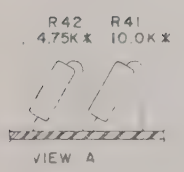

– 17-0204-000
AEP/SQUIV SMB CONN
[illegible] PL

% TOLERANCE EXCEPT AS NOTED.
µF EXCEPT AS NOTED.
.04 TO .06 BEYOND BOTTOM OF
NTS TO BE .35 FROM COMPONENT
SK (✱) ARE 1/4 W, 1%.

ITEM	REQ'D	PART NO.	DESCRIPTION
1	1	1-23-0594	SPECTRUM ANALYZER BD. #2 ASS'Y.

LIST OF MATERIALS

TOLERANCES
UNLESS OTHERWISE SPECIFIED
ALL DIMENSIONS APPLY AFTER FINISH
DECIMALS [illegible]
ANGLES ± 1/2°
FRACTIONS ± [illegible]
SURFACE ROUGHNESS 125
REMOVE ALL BURRS

DRAWN [illegible] DATE [illegible]
CHECKED DATE
APPROVED DATE [illegible]

MATERIAL
FINISH

-IFR INC-
WICHITA, KANSAS

SPECTRUM ANALYZER
BOARD #2 ASSEMBLY

SIZE C
PART NUMBER 3-23-0594
REV
SCALE 2
WEIGHT
SHEET OF

1-23-0639
NEXT ASSY
QTY
APPLICATION
MODEL

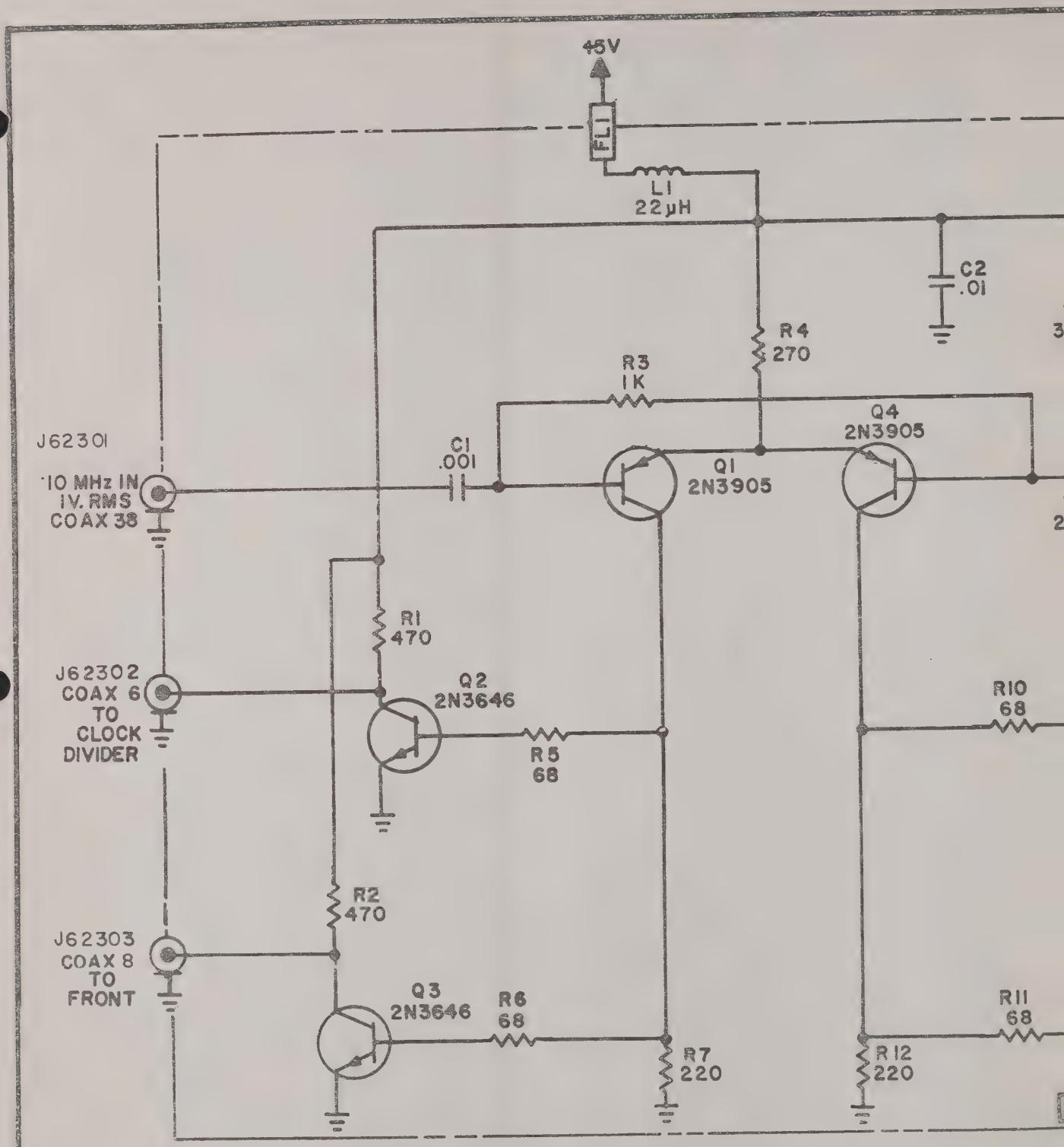

NOTES:

1. ALL RESISTORS ARE 1/8W, 10% AND VALUES ARE IN OHMS UNLESS OTHERWISE SPECIFIED.
2. ALL CAPACITORS ARE IN μf UNLESS OTHERWISE SPECIFIED.

LAST USED NOS.
C4, R15, Q6, L1

DATE	REV	CHANGE	APP'D
10/4/77	A	INCORP. ECN # 2419 LC	mil
1/3/78	B	INC. ECN # 2570 A.A.	WW
1/17/78	C	INC ECN 2709 JJT	WW

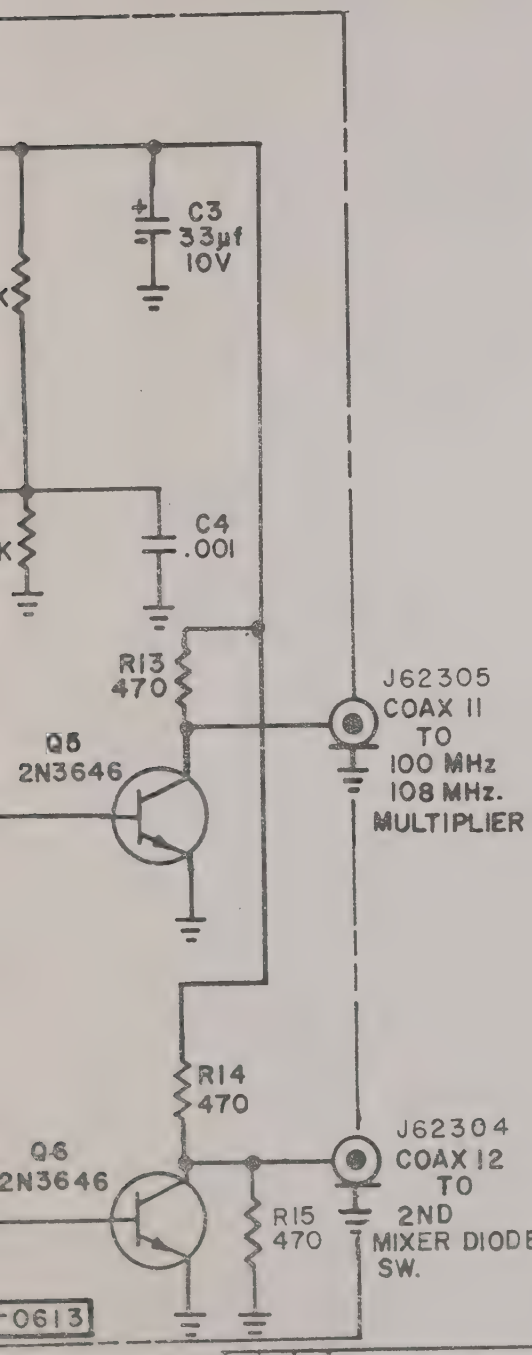

ITEM	REQ'D	PART NO.	DESCRIPT

LIST OF MATERIALS

FRAM 10009	MODEL	APPLICATION	
1	QTY		
23-0619	NEXT ASS'Y		

TOLERANCES
UNLESS OTHERWISE SPECIFIED
ALL DIMENSIONS APPLY AFTER FINISH
DECIMALS .XX = ± .010 .XXX = ± .005
ANGLES ± 1/2°
FRACTIONS ± 1/64
SURFACE ROUGHNESS 125
REMOVE ALL BURRS

MATERIAL

DRAWN DATE TJT 6-27-77
CHECKED DATE
APPROVED DATE

- IFR NC -
WICHITA KANSAS

TITLE
TCXO
OUTPUT DISTRIBUTION
SCHEMATIC

SIZE B | PART NUMBER 2-23-0623 | REV C

SCALE | WT. | SHEET 1 OF 1

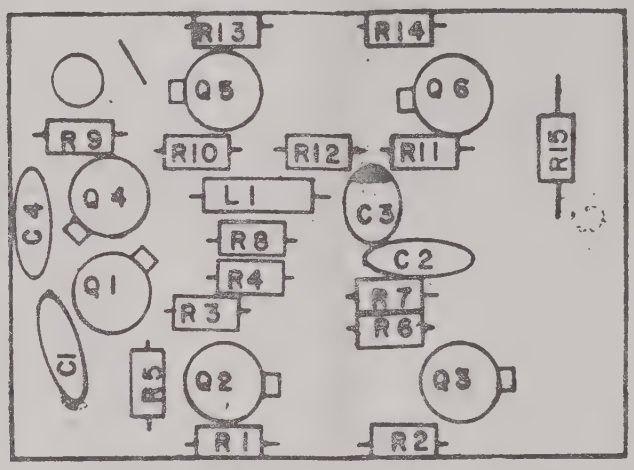
R13
R14
Q5
Q6
R9
R10
R12
R11
R15
Q4
L1
C3
C4
R8
C2
Q1
R4
R7
R3
R6
C1
R5
Q2
Q3
R1
R2

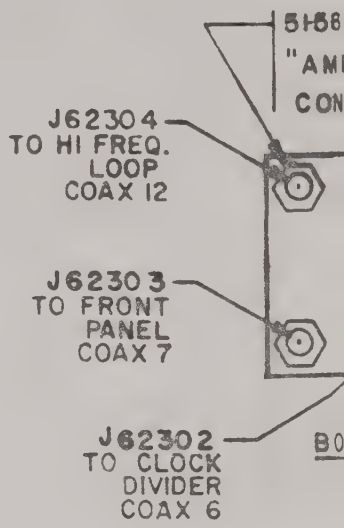
J62304
TO HI FREQ.
LOOP
COAX 12
J62303
TO FRONT
PANEL
COAX 7
J62302
TO CLOCK
DIVIDER
COAX 6

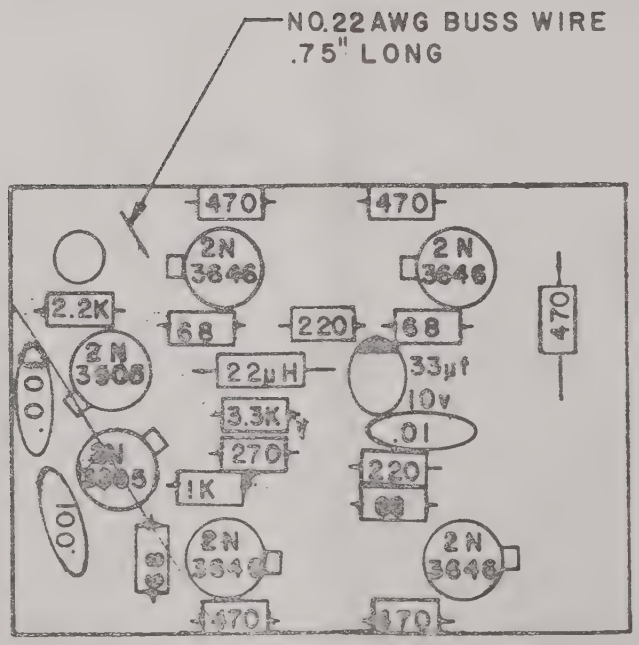
NO.22 AWG BUSS WIRE
.75" LONG
470
470
2N
3646
2N
3646
2.2K
68
220
68
470
2N
3646
22μH
33μf
10v
.001
3.3K
.01
270
220
1K
.001
2N
3646
2N
3646
470
470

DATE	REV	CHANGE	APP'D
1/3/76	A	INC ECN # 2570 A.A.	WW
1-19-82	A-1	INC ECN 2709	WW

0000-09 5
RICON" SMB
ECTOR (5 PL)

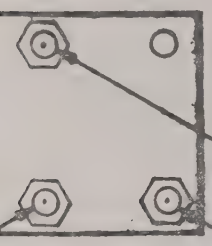

J62305
TO 100-108 MHz
MULTIPLIER
COAX 11

J62301
10MHz IN
1V. RMS
COAX 38

TOM VIEW
CALE: 1:1

NOTES:

1. ALL RESISTORS ARE 1/8 W., 10% TOLERANCE EXCEPT AS NOTED.
2. ALL CAPACITOR VALUES ARE IN µF EXCEPT AS NOTED.
3. COMPONENT LEADS MAY EXTEND .04 TO .06 BEYOND BOTTOM OF BOARD AFTER SOLDERING.
4. MAXIMUM HEIGHT OF COMPONENTS TO BE .45 FROM COMPONENT SIDE OF BOARD.

5 TEFLON INSULATOR MUST BE CUT FLUSH WITH BASE OF CONNECTOR.

NEXT ASS'Y	QT'Y	MODEL	ITEM	REQ'D	PART NO.	DESCRIPTION
23-0620	1	FM/AM1000S				
			1	1	23-0619	TCXO P.C. BD ASS'Y

APPLICATION — LIST OF MATERIALS

TOLERANCES
UNLESS OTHERWISE SPECIFIED
ALL DIMENSIONS APPLY AFTER FINISH
DECIMALS: ± .005
ANGLES: ± 1/2°
FRACTIONS: ± 1/64
SURFACE ROUGHNESS 125
REMOVE ALL BURRS

DRAWN DATE: RKK 3/18/77
CHECKED DATE: WW 4-8-77
APPROVED DATE: MA 4-9-77

INSTRUMENT FLIGHT RESEARCH CORPORATION
WICHITA, KANSAS

TITLE: TCXO OUTPUT DIST. AMP ASS'Y

MATERIAL
TREATMENT
FINISH

SIZE: B
PART NUMBER: 2-23-0619
REV: A-1
SCALE: 2:1 & NOTED
WEIGHT: ——
SHEET 1 OF 1

FM/AM-1000S, units S/N 801 through S/N 1615. The Duty Cycle Regulator Assembly has been changed to incorporate the modifications shown (also reference Assembly Dwg. No. 4-23-0384 [Fig. 6-15] and Schematic 3-23-0051 [Fig. 6-11] in July, 1978, printing of FM/AM-1000S manual).

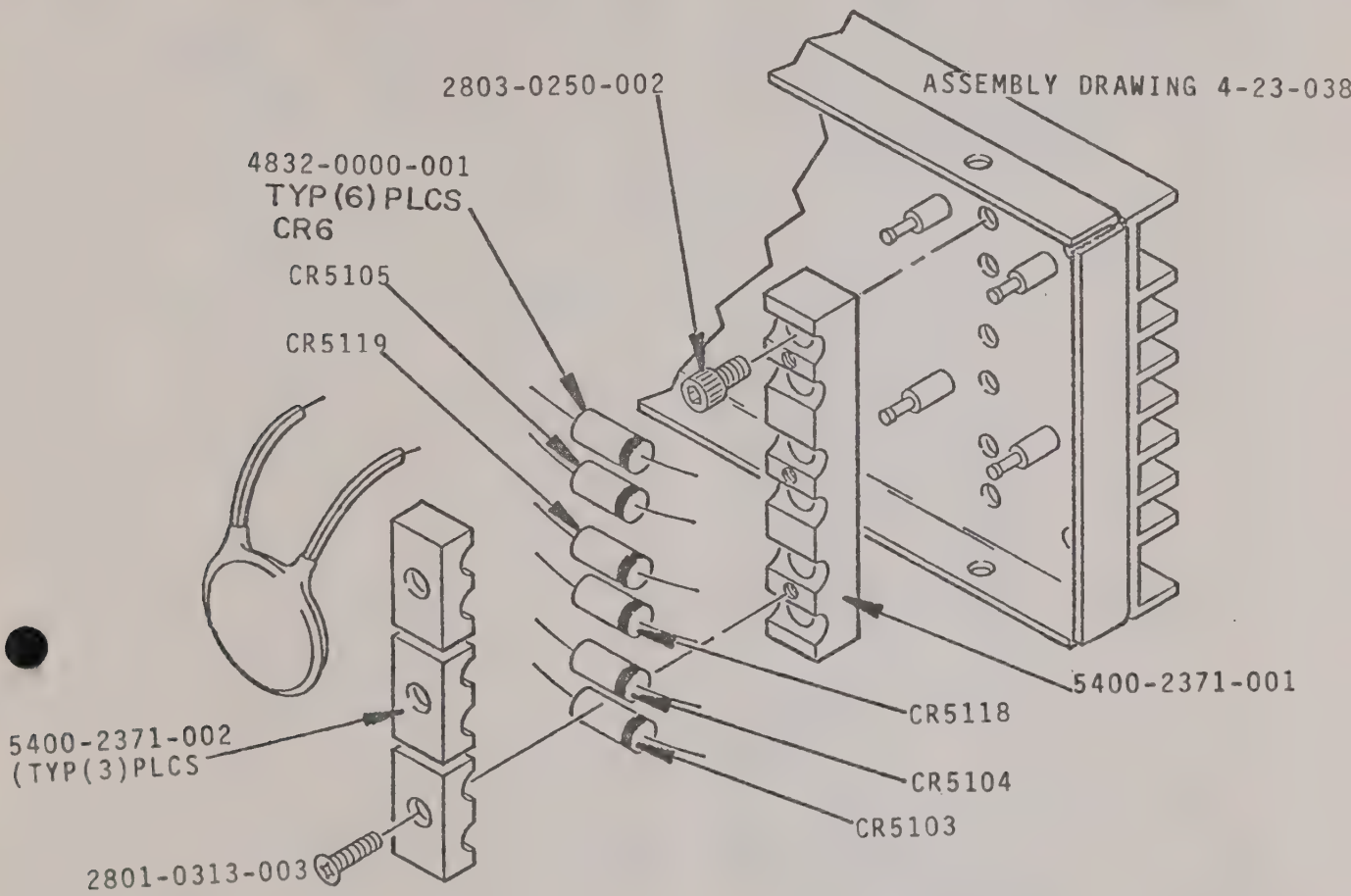

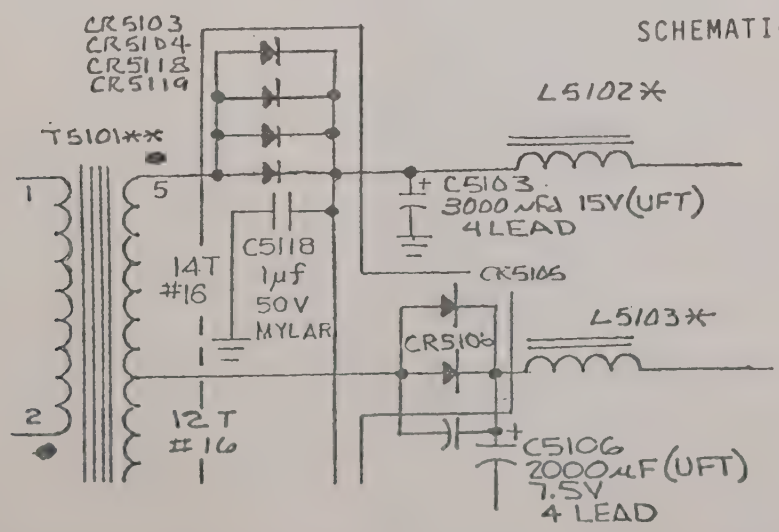

ASSEMBLY DRAWING 4-23-0384

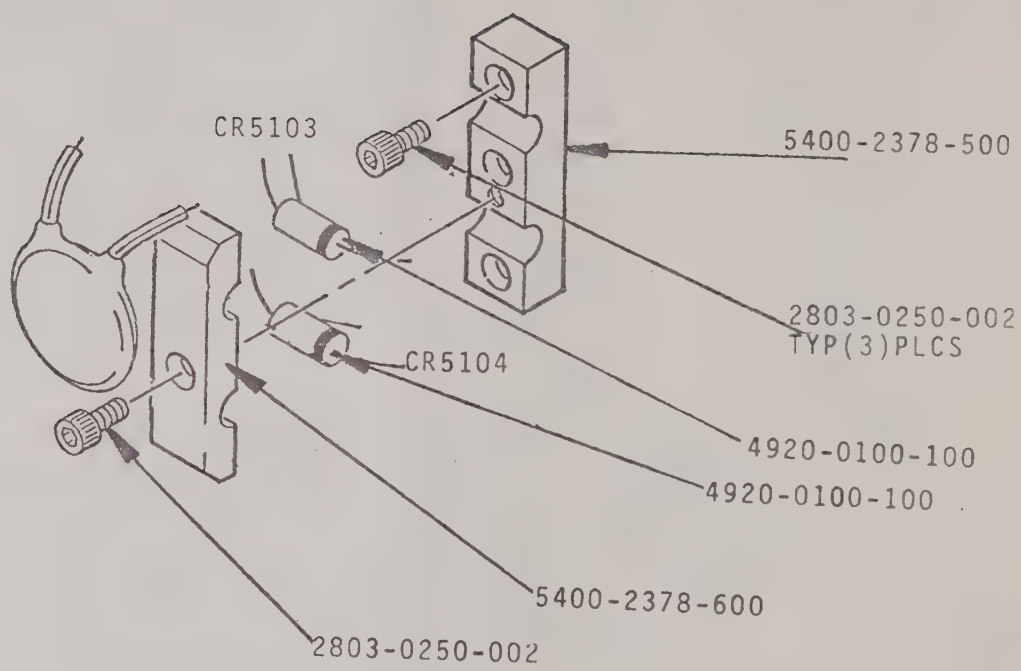

SCHEMATIC 3-23-0051

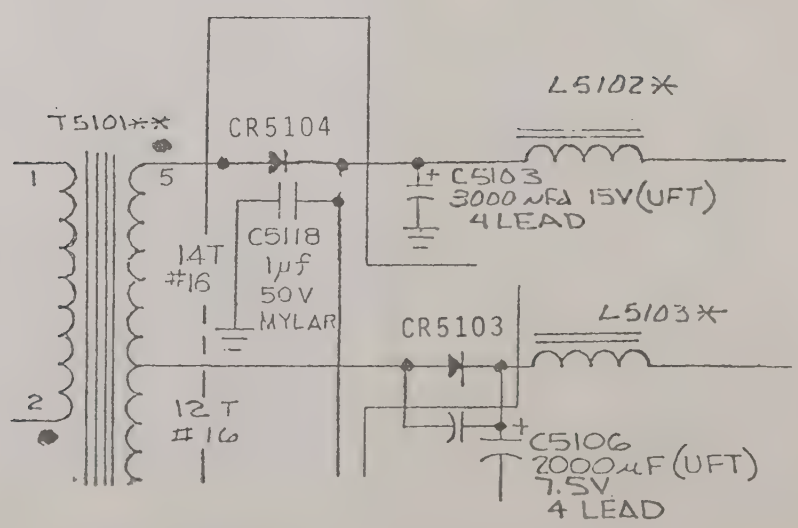

DUTY CYCLE REGULATOR - S/N 1286 and ON

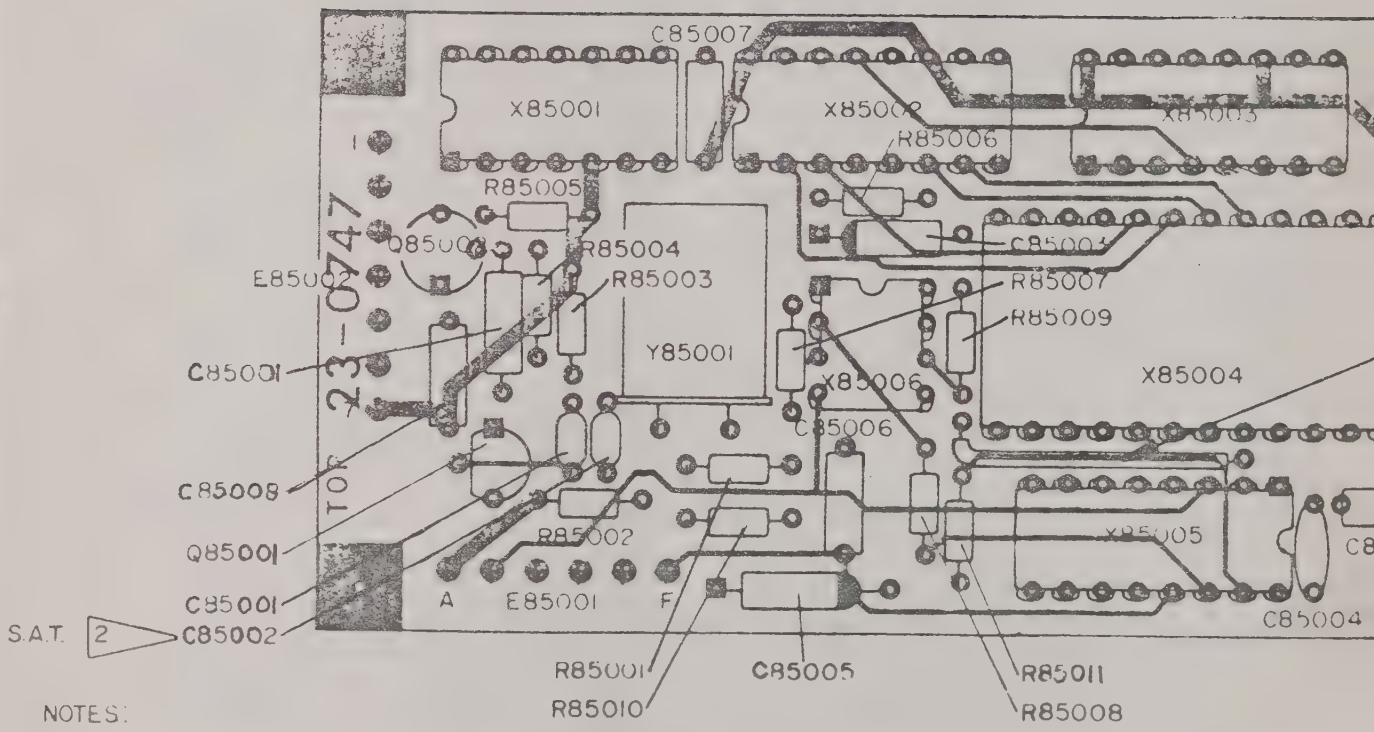

NOTES:

1. REFERENCE CIRCUIT SCHEMATIC 0000-2374-300.

2. C85002 SET AT TEST (S A T) RANGE NOMINAL 22pF, RANGE 22pF OR 27pF

DATE	REV	CHANGE	APP'D

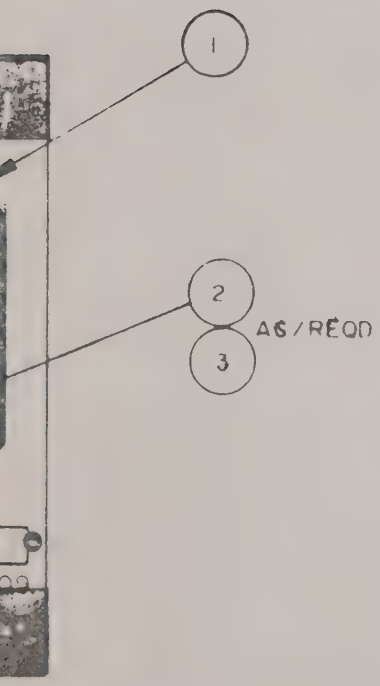

ITEM	REQ'D	PART NO.	DESCRIPTION

LIST OF MATERIALS

MODEL	QTY	NEXT ASSY	APPLICATION
1000S	1	23-753	

TOLERANCES
UNLESS OTHERWISE SPECIFIED
ALL DIMENSIONS APPLY AFTER FINISH
DECIMALS. .xx = ± .010 .xxx = ± .005
ANGLES ± 1/2°
FRACTIONS: ± 1/64
SURFACE ROUGHNESS 125
REMOVE ALL BURRS

DRAWN	DATE
ER	4/9/80
CHECKED	DATE
J Adams	11-6-80
APPROVED	DATE
Gorsth	11/6/80

MATERIAL //

FINISH //

-IFR INC-
WICHITA, KANSAS

TITLE
DUAL TONE GEN BD. #2 ASSY.
FM-AM 1000S

SIZE	PART NUMBER	REV
B	7010-2374-900	

SCALE	WEIGHT	
2 x 1	//	SHEET 1 OF 1

TOP VIEW

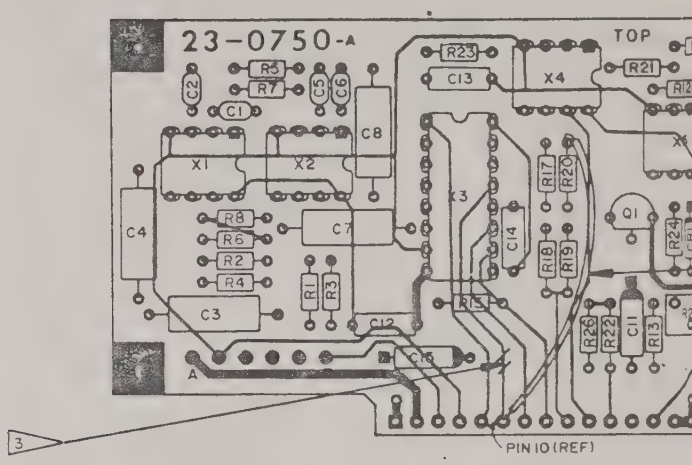

BOTTOM VIEW

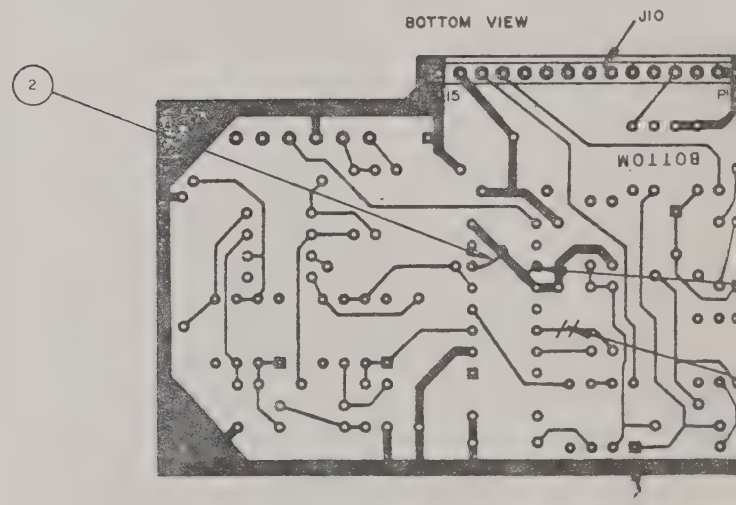

NOTES:

1. FOR CABLE INTERCONNECT SEE 0000-2364-001.
2. REFERENCE CIRCUIT SCHEMATIC 0000-2374-300.
3. CUT AWAY PATHWORK AS INDICATED, TWO PLACES.

DATE	REV	CHANGE	APP'D
2-12-81	A	INC ECN 3591 RF	

ITEM	REQ'D	PART NO	DESCRIPTION

LIST OF MATERIALS

TOLERANCES
UNLESS OTHERWISE SPECIFIED
ALL DIMENSIONS APPLY AFTER FINISH
DECIMALS .xx = ± .010 .xxx = ± .005
ANGLES ± 1/2°
FRACTIONS ± 1/64
SURFACE ROUGHNESS 125
REMOVE ALL BURRS

DRAWN ER 4/11/80
CHECKED J Adams 11-6-80
APPROVED Bopoth 11/6/80

- ISR INC -
WICHITA, KANSAS

TITLE
DUAL TONE GEN P.C. BD. #3 ASSY.
FM - AM 1000 S

SIZE C
PART NUMBER 7010 - 2375 - 200
REV A
SCALE 2 x 1
WEIGHT
SHEET 1 OF

NEXT ASSY	QTY	MODEL	APPLICATION
23-733	1	1000S	

MATERIAL
FINISH

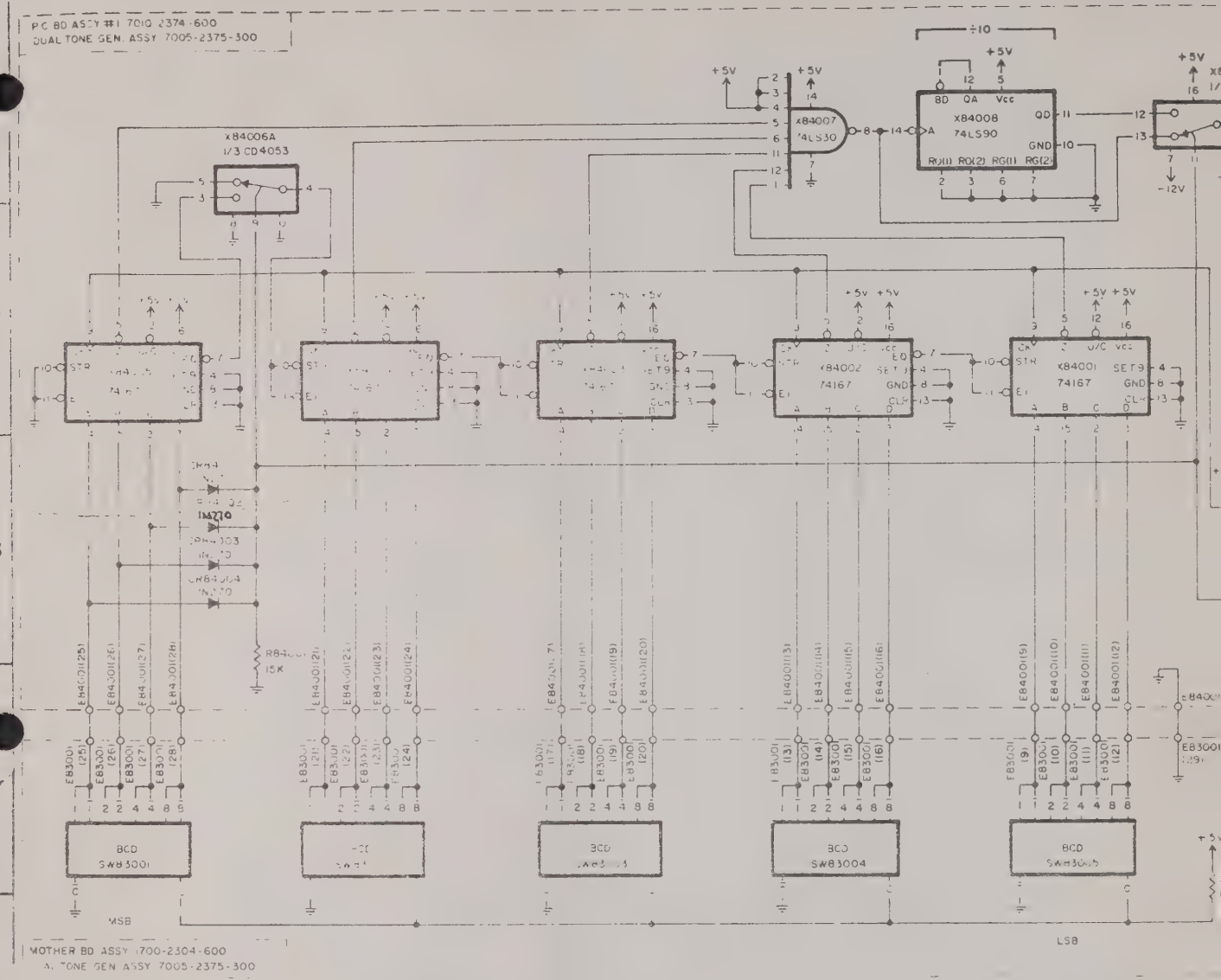

NOTES:

1. ALL RESISTORS ARE 1/8W, 10% UNLESS OTHERWISE NOTED
2. ALL POLARIZED CAPACITORS ARE TANTALUM
3. ALL CAPACITANCE IS EXPRESSED IN MICRO-FARADS UNLESS OTHERWISE NOTED
4. E85012 SET AT TEST (5 A7) RANGE NOMINAL 22pF, RANGE 22pF OR 27pF

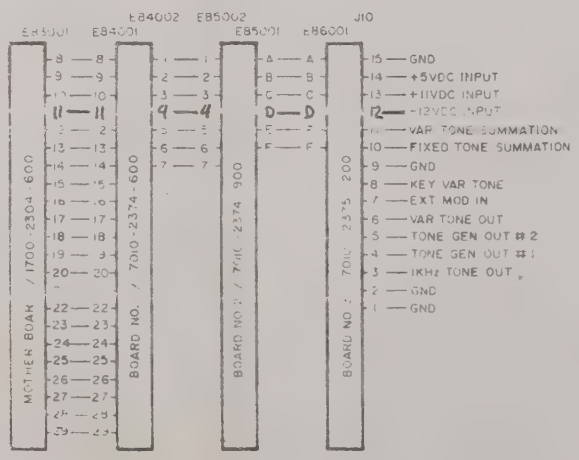

DUAL TONE GENERATOR INTERCONNECT

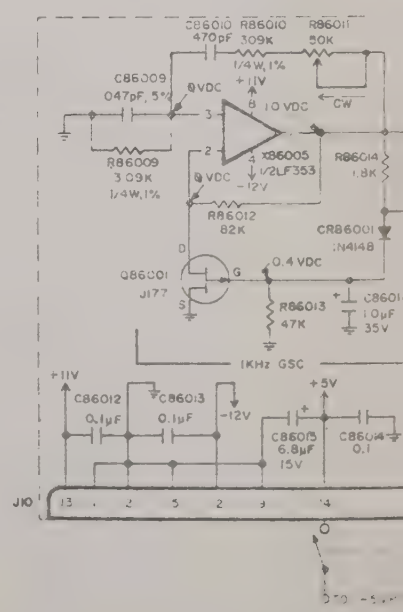

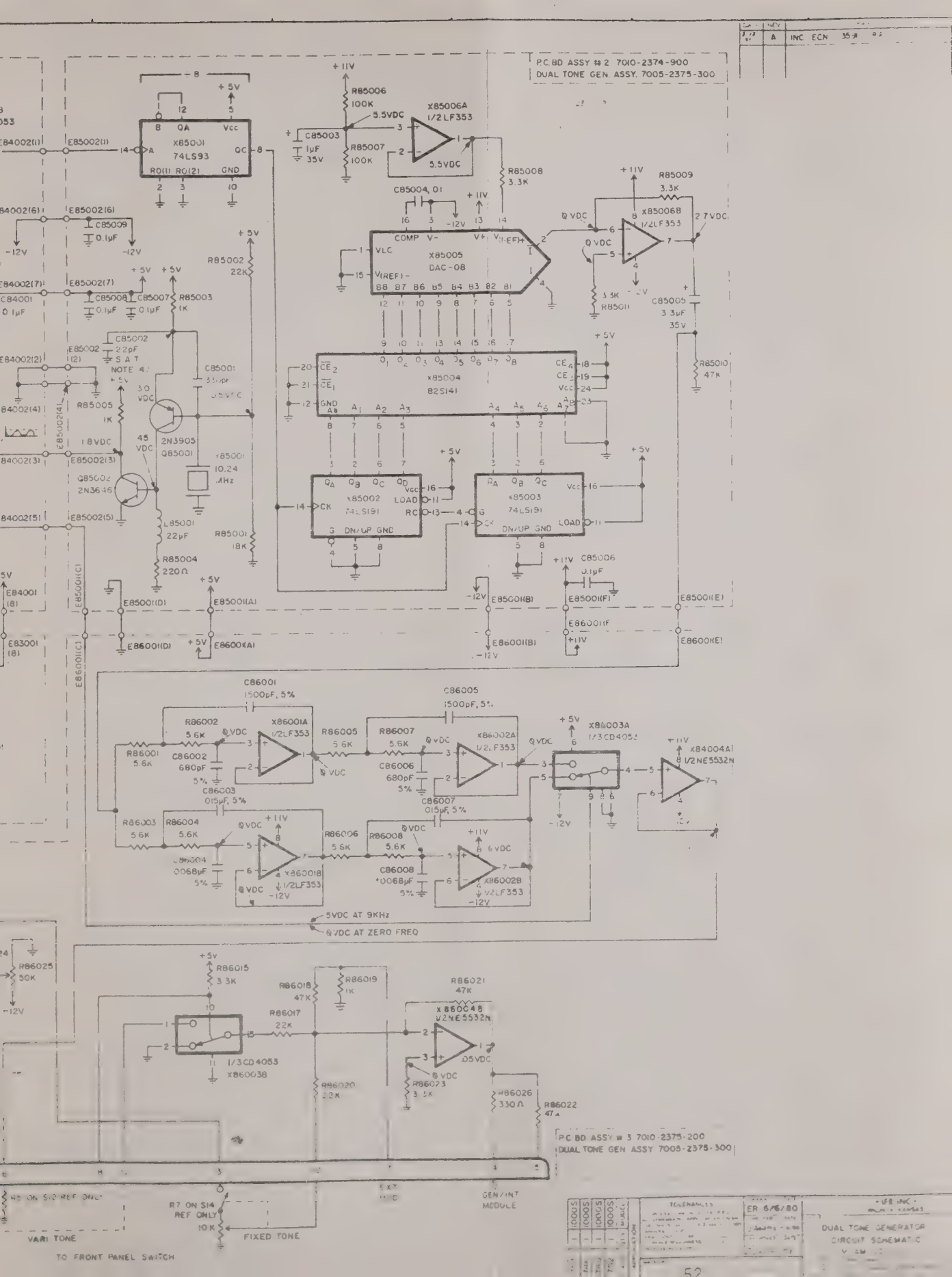
P.C. BD ASSY # 2 7010-2374-900
DUAL TONE GEN. ASSY. 7005-2375-300
X85001
74LS93
X85006A
1/2 LF353
X85006B
1/2 LF353
X85005
DAC-08
X85004
82S141
X85002
74LS191
X85003
74LS191
2N3905
Q85001
2N3646
Q85002
X85001
10.24 MHz
X86001A
1/2 LF353
X86002A
1/2 LF353
X86003A
1/3 CD4053
X84004A
1/2 NE5532N
X86001B
1/2 LF353
X86002B
1/2 LF353
5VDC AT 9KHz
0VDC AT ZERO FREQ
X860048
1/2 NE5532N
1/3 CD4053
X860038
P.C. BD ASSY # 3 7010-2375-200
DUAL TONE GEN ASSY 7005-2375-300
GEN/INT MODULE
VARI TONE
FIXED TONE
TO FRONT PANEL SWITCH
DUAL TONE GENERATOR
CIRCUIT SCHEMATIC

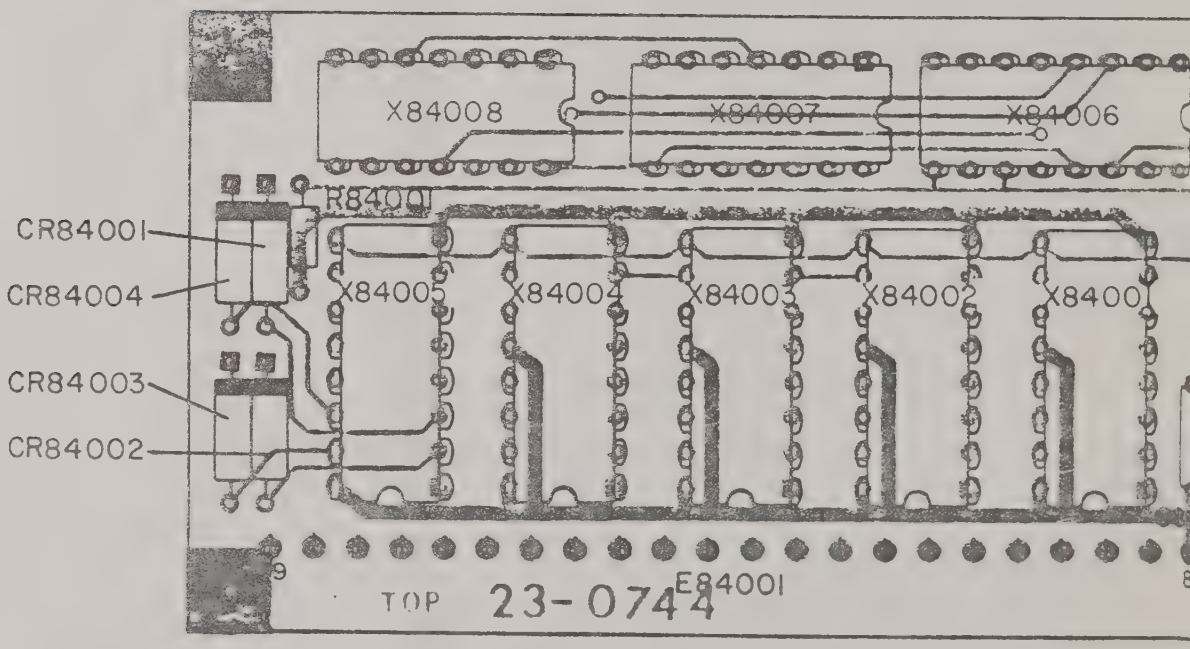

NOTES:

1. REFERENCE CIRCUIT SCHEMATIC 0000-2374-300.

DATE	REV	CHANGE	APP'D

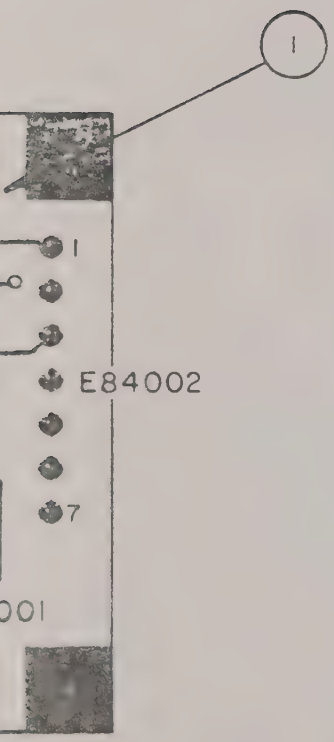

ITEM	REQ'D	PART NO.	DESCRIPTION

LIST OF MATERIALS

MODEL	1000S
QTY	1
NEXT ASS'Y	23-753
APPLICATION	

TOLERANCES
UNLESS OTHERWISE SPECIFIED
ALL DIMENSIONS APPLY AFTER FINISH
DECIMALS: .xx = ± .010 .xxx = ± .005
ANGLES: ± 1/2°
FRACTIONS: ± 1/64
SURFACE ROUGHNESS 125
REMOVE ALL BURRS

	DATE
DRAWN	ER 4-9-80
CHECKED	J Adams 11-6-80
APPROVED	BOFCTH 11/6/80

-IFR INC-
WICHITA, KANSAS

TITLE
DUAL TONE GEN. BD. #1 ASSY.
FM-AM 1000 S

MATERIAL —//—
FINISH —//—

SIZE	PART NUMBER	REV
B	7010-2374-600	

SCALE	WEIGHT	
2 x 1	—//—	SHEET 1 OF 1

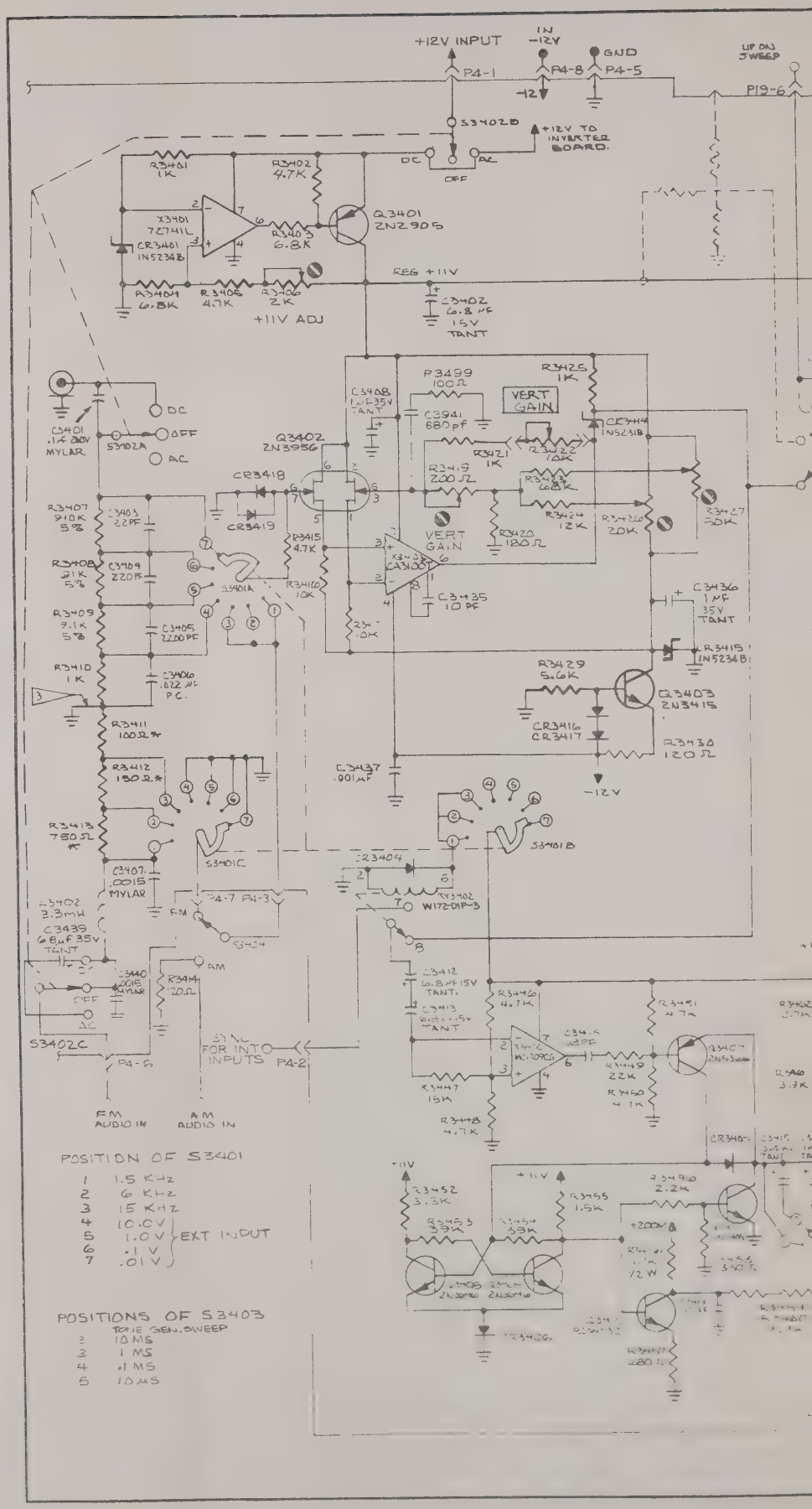
+12V INPUT
IN -12V
GND
P4-1
P4-8
P4-5
-12
S3402B
+12V TO INVERTER BOARD.
DC
AC
OFF
R3401 1K
R3402 4.7K
X3401 72741L
CR3401 1N5234B
R3403 6.8K
Q3401 2N2905
R3404 6.8K
R3405 4.7K
R3406 2K
+11V ADJ
REG +11V
C3402 6.8 MF 15V TANT
C3401 .1µF 200V MYLAR
S3402A
R3499 100Ω
C3408 1µF 35V TANT
C3441 680 pf
VERT GAIN
R3425 1K
CR3414 1N5231B
Q3402 2N3956
R3421 1K
R3422 10K
R3419 200Ω
R3423 68K
R3424 12K
R3426 20K
R3427 20K
CR3418
CR3419
R3420 180Ω
R3407 910K 5%
C3403 22PF
R3408 91K 5%
C3404 220PF
R3409 9.1K 5%
C3405 2200PF
R3410 1K
C3406 .022µF P.C.
R3411 100Ω
R3412 150Ω
R3413 750Ω
C3407 .0015 MYLAR
S3401A
R3415 4.7K
R3416 10K
R3414 10K
X3403 CA3003
C3435 10 PF
C3436 1MF 35V TANT
R3415 1N5234B
R3429 5.6K
Q3403 2N3415
CR3416 CR3417
R3430 120Ω
-12V
C3437 .001µF
S3401C
S3401B
CR3404
R3402 W172DIP-3
P4-7 P4-3
FM
S3404
L3402 3.3mH
C3439 6.8µF 35V TANT
C3440 .0015 MYLAR
R3444 20Ω
AM
OFF
AC
S3402C
P4-6
SYNC FOR INT INPUTS
P4-2
FM AUDIO IN
AM AUDIO IN
C3412 6.8µF 15V TANT
C3413 6.8µF 15V TANT
R3446 4.7K
R3451 4.7K
C3414 33PF
R3449 22K
R3447 15K
R3460 4.7K
R3448 4.7K
POSITION OF S3401
1 1.5 KHz
2 6 KHz
3 15 KHz
4 10.0V
5 1.0V
6 .1 V
7 .01 V
EXT INPUT
POSITIONS OF S3403
TONE GEN. SWEEP
2 10 MS
3 1 MS
4 .1 MS
5 10µS
+11V
R3452 3.3K
R3455 1.5K
R3453 39K
R3454 39K
2.2K
+200V
12 W

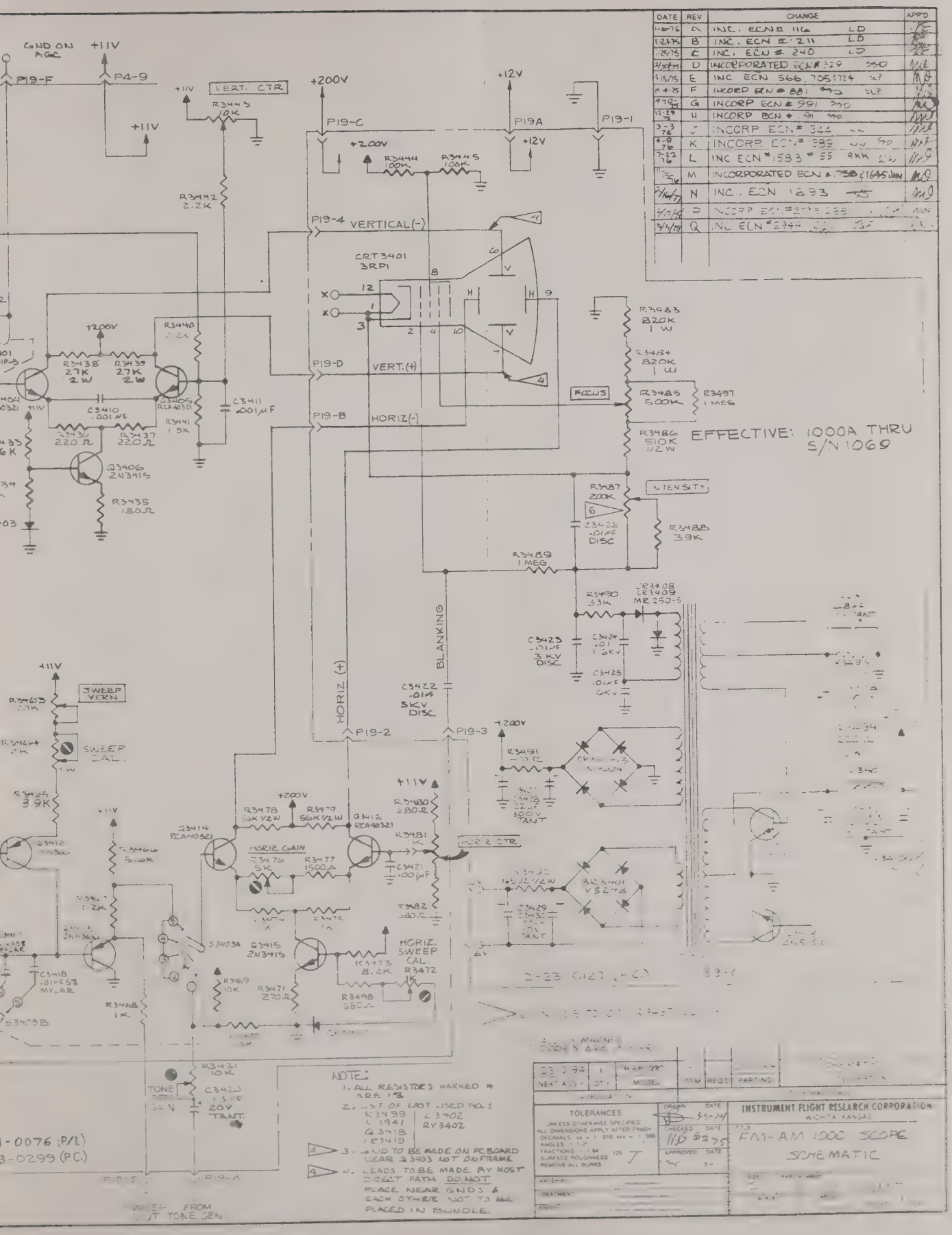

DATE	REV	CHANGE	APP'D
1-6-75	A	INC. ECN # 116 LD	
1-24-75	B	INC. ECN # 211 LD	
1-28-75	C	INC. ECN # 240 LD	
2/28/75	D	INCORPORATED ECN # 329	
5/15/75	E	INC ECN 566, 705, 724	
6-4-75	F	INCORP ECN # 881	
9-9-75	G	INCORP ECN # 991	
12-29-75	H	INCORP ECN # 91	
2-3-76	J	INCORP ECN # 344	
6-8-76	K	INCORP ECN # 1385	
7-22-76	L	INC ECN # 1583 # 55 RKK	
11-5-76	M	INCORPORATED ECN # 1645 JAN	
2/14/77	N	INC. ECN 1693	
3/17/77	P	INCORP ECN # 1795	
4/5/78	Q	INC ECN # 2744	

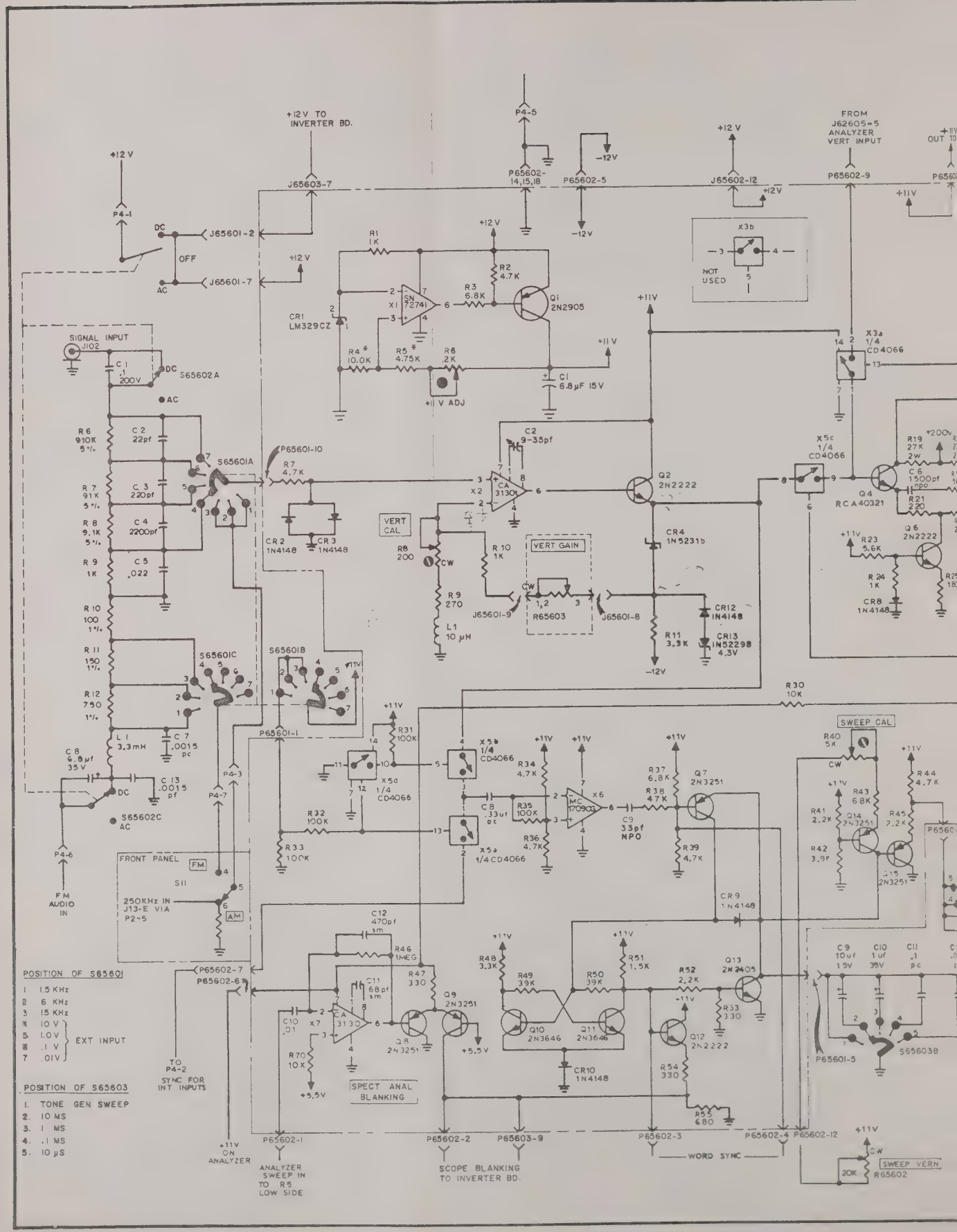
+12 V TO INVERTER BD.
P4-5
P65602-14,15,18
P65602-5
-12V
+12 V
J65602-12
FROM J62605-5 ANALYZER VERT INPUT
P65602-9
+11V OUT TO
P65602
J65603-7
P4-1
DC
OFF
AC
J65601-2
J65601-7
R1 1K
R2 4.7K
R3 6.8K
Q1 2N2905
X1 SN 72741
CR1 LM329CZ
R4* 10.0K
R5* 4.75K
R6 .2K
+11 V ADJ
C1 6.8µF 15V
X3b
NOT USED
X3a 1/4 CD4066
SIGNAL INPUT J102
C1 .1 200V
S65602A
R6 910K 5%
C2 22pf
R7 91K 5%
C3 220pf
R8 9.1K 5%
C4 2200pf
R9 1K
C5 .022
R10 100 1%
R11 150 1%
R12 750 1%
S65601A
P65601-10
R7 4.7K
CR2 1N4148
CR3 1N4148
C2 9-35pf
CA 3130
X2
VERT CAL
R8 200
R9 270
L1 10 µH
R10 1K
VERT GAIN
R65603
J65601-9
J65601-8
Q2 2N2222
CR4 1N5231B
R11 3.3K
CR12 1N4148
CR13 1N52298 4.3V
X5c 1/4 CD4066
Q4 RCA40321
R19 27K 2W
C6 1500pf npo
R21 220
Q6 2N2222
R23 5.6K
R24 1K
CR8 1N4148
S65601C
S65601B
R30 10K
R31 100K
X5d 1/4 CD4066
X5b 1/4 CD4066
X5a 1/4 CD4066
R34 4.7K
R35 100K
R36 4.7K
C8 .33uf pc
MC 1709CG
X6
C9 33pf NPO
R37 6.8K
R38 4.7K
Q7 2N3251
R39 4.7K
R32 100K
R33 100K
SWEEP CAL
R40 5K
R43 6.8K
R44 4.7K
R45 2.2K
R41 2.2K
R42 3.9K
Q14 2N3251
Q15 2N3251
C8 6.8µf 35V
C7 .0015 pc
C13 .0015 pf
S65602C
P4-6
P4-3
P4-7
FM AUDIO IN
FRONT PANEL
FM
S11
250KHz IN J13-E VIA P2-5
AM
CR9 1N4148
C12 470pf sm
R46 1MEG
R47 330
C11 68pf sm
C10 .01
R70 10K
+5.5V
Q8 2N3251
Q9 2N3251
R48 3.3K
R49 39K
R50 39K
R51 1.5K
R52 2.2K
Q13 2N2405
R33 330
Q10 2N3646
Q11 2N3646
Q12 2N2222
CR10 1N4148
R54 330
R55 680
C9 10uf 15V
C10 1uf 35V
C11 .1 pc
S656038
P65601-5
POSITION OF S65601
1 1.5 KHz
2 6 KHz
3 15 KHz
4 10 V
5 1.0 V
6 .1 V
7 .01V
EXT INPUT
P65602-7
P65602-6
TO P4-2 SYNC FOR INT INPUTS
POSITION OF S65603
1. TONE GEN SWEEP
2. 10 MS
3. 1 MS
4. .1 MS
5. 10 µS
SPECT ANAL BLANKING
+11V ON ANALYZER
P65602-1
ANALYZER SWEEP IN TO R5 LOW SIDE
P65602-2
P65603-9
SCOPE BLANKING TO INVERTER BD.
P65602-3
P65602-4
P65602-12
WORD SYNC
SWEEP VERN.
R65602
20K

DATE	REV	CHANGE	APP'D
8/16/77	A	INCORP. ECN 2195 AA	
[illegible]	B	INCORP ECN 2363	
[illegible]	C	INC ECN 2682	
8/15/78	D	INC ECN 2828	

NOTE

1. KEEP AWAY FROM GNDS & EACH OTHER. KEEP DIRECT. DO NOT BUNDLE.
2. ALL RESISTORS ARE 1/8W, 10% TOLERANCE EXCEPT AS NOTED.
3. RESISTORS IDENTIFIED WITH ASTERISK (*) ARE 1/4W, 1% TOLERANCE.

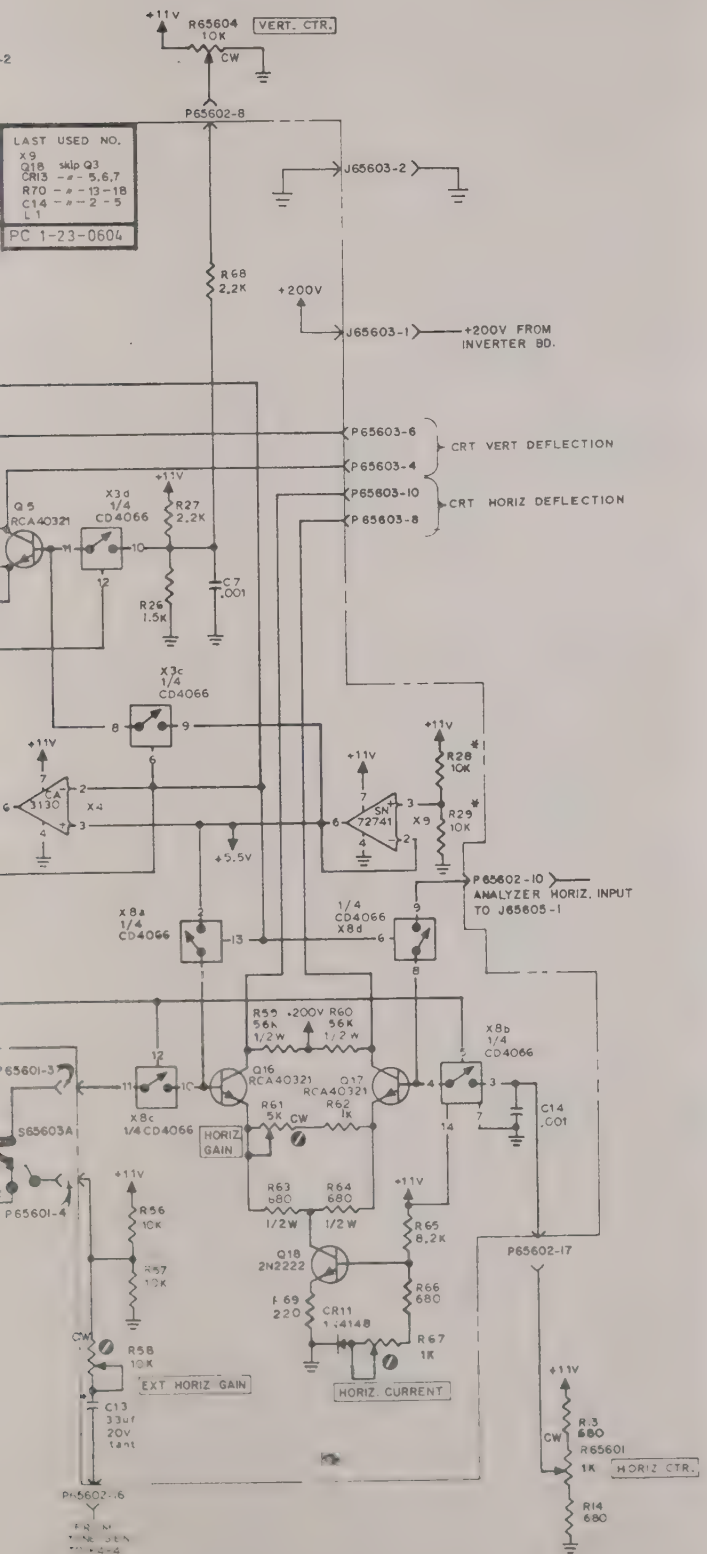

EFFECTIVE: FM/AM1000A S/N 1070 & ON

ITEM	REQ'D	PART NO	DESCRIPTION
			LIST OF MATERIALS

TOLERANCES

-IRB INC-
WICHITA KANSAS

FM-AM 1000A SCOPE
SCHEMATIC (WITH WORD SYNC & SPECTRUM ANALYZER DISPLAYS)

4-23-[illegible]

23 0602

FM/AM-1000S, units S/N 801 through S/N 1615. The Rear Panel Assembly has been changed to incorporate the modifications shown (also reference Wiring Assembly, Dwg. No. 3-23-0380 [Fig. 6-5] and Schematic 3-23-0403 [Fig. 6-4] in July, 1978, printing of FM/AM-1000S manual).

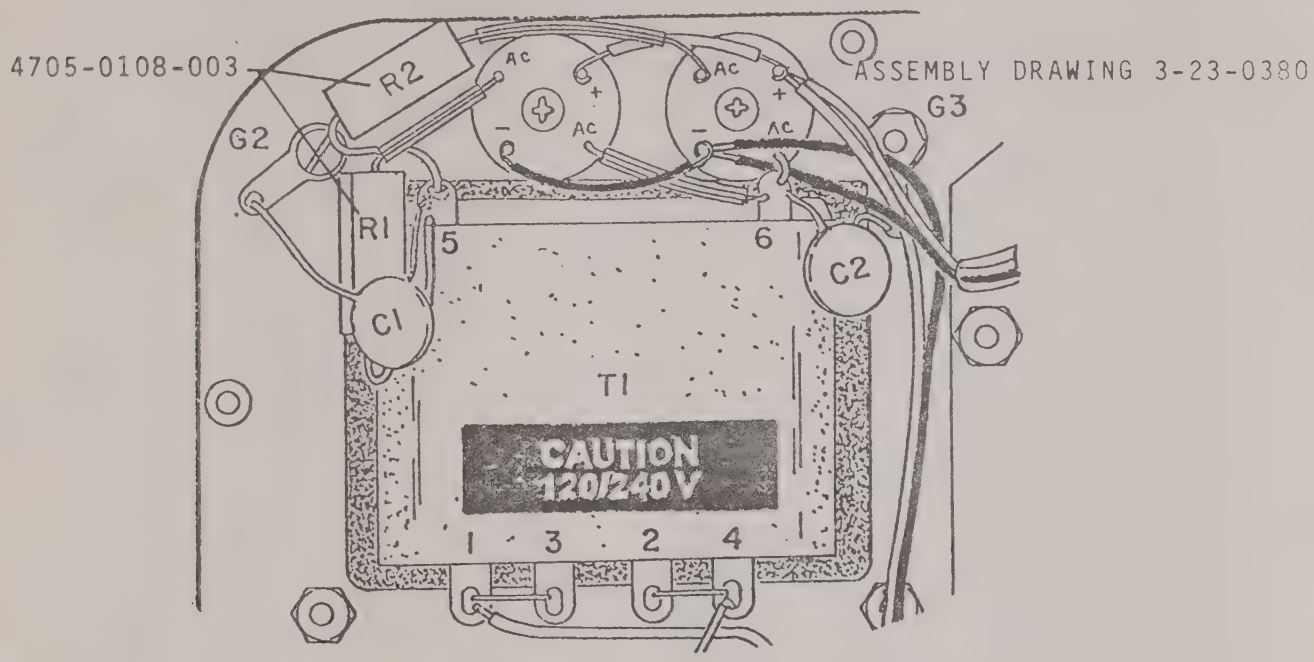

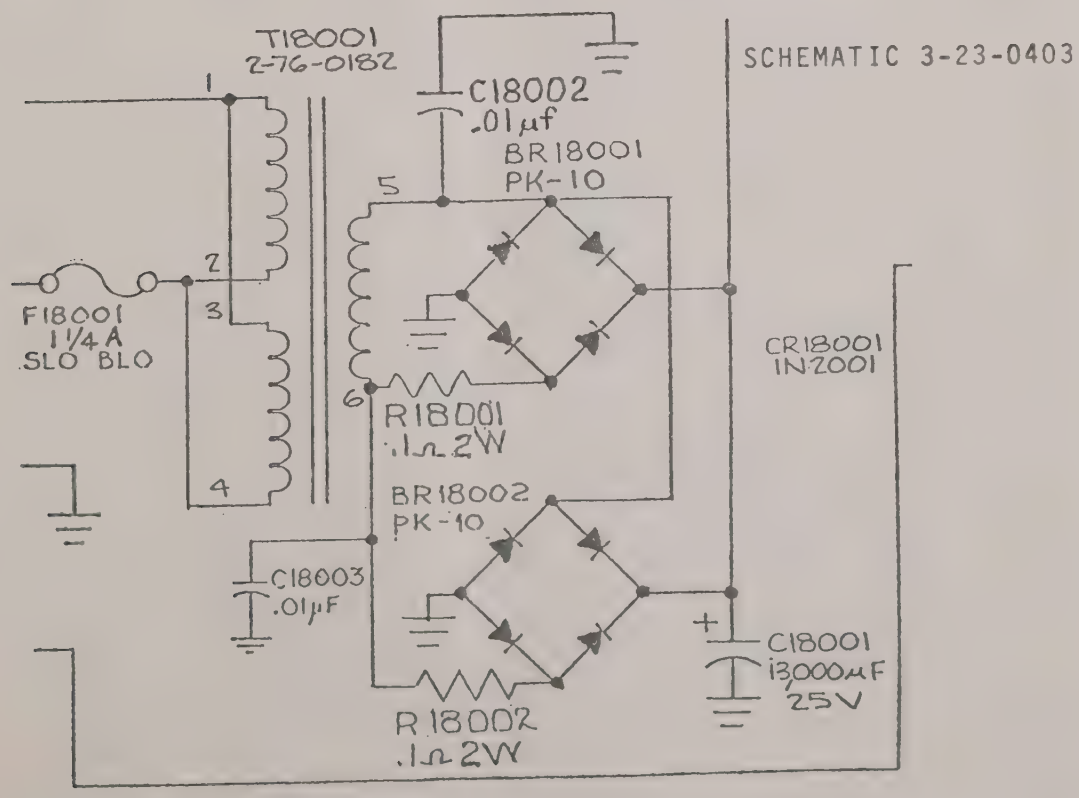

ASSEMBLY DRAWING 3-23-0380

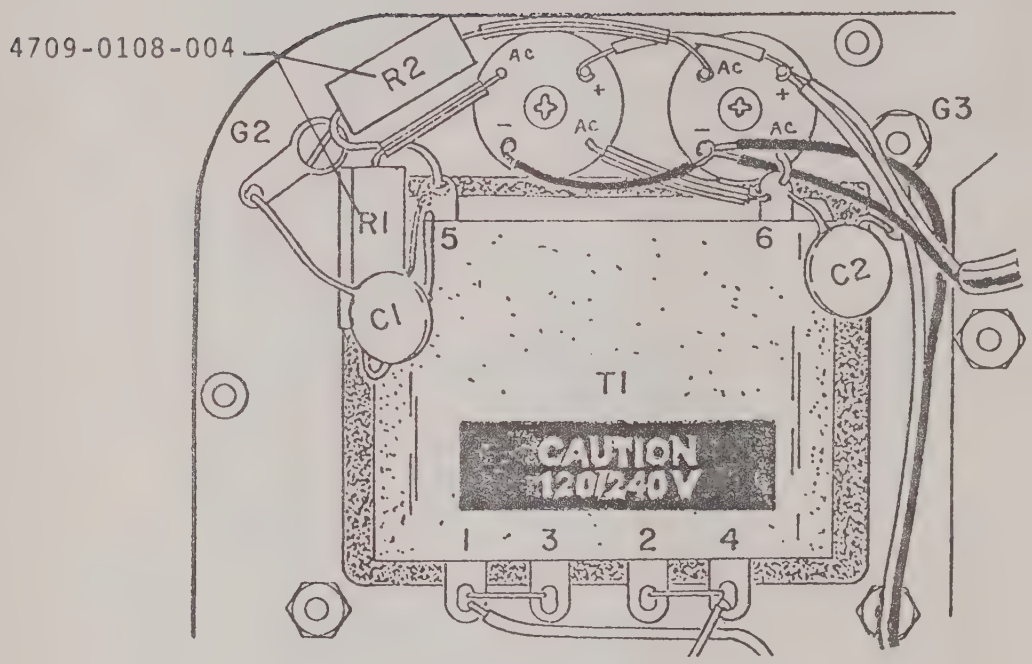

SCHEMATIC 3-23-0403

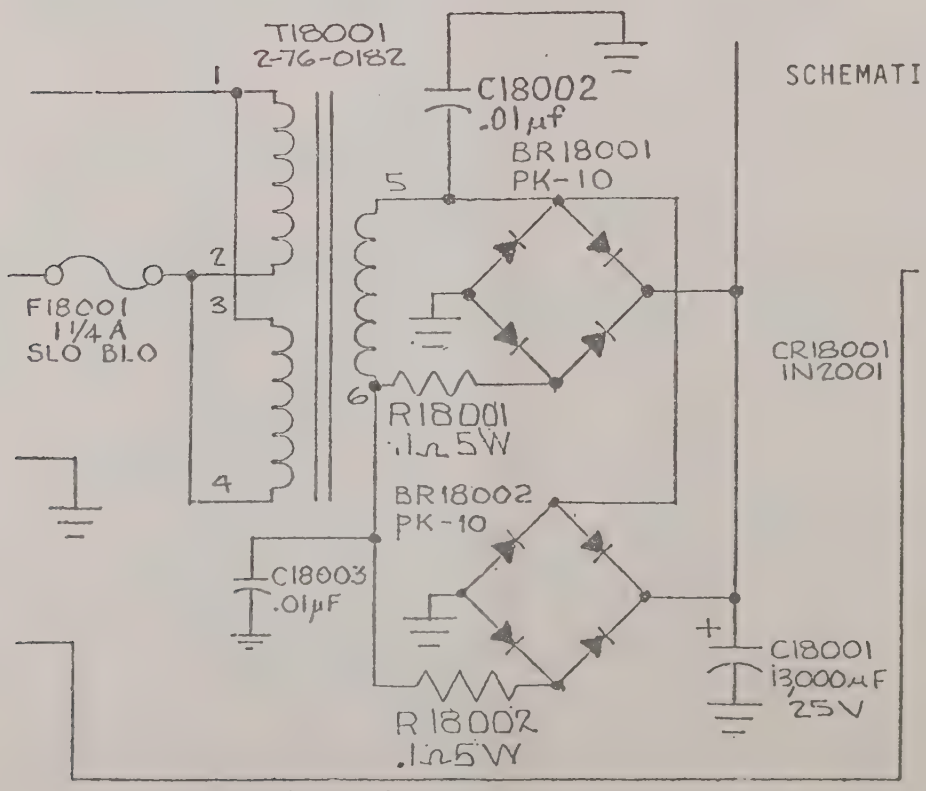

REAR PANEL - S/N 1391 and ON

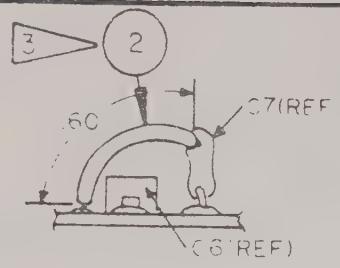

DETAIL A
(NOT TO SCALE)

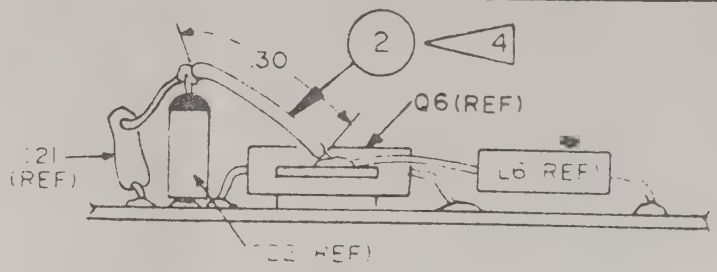

DETAIL B NOT TO SCALE

DET

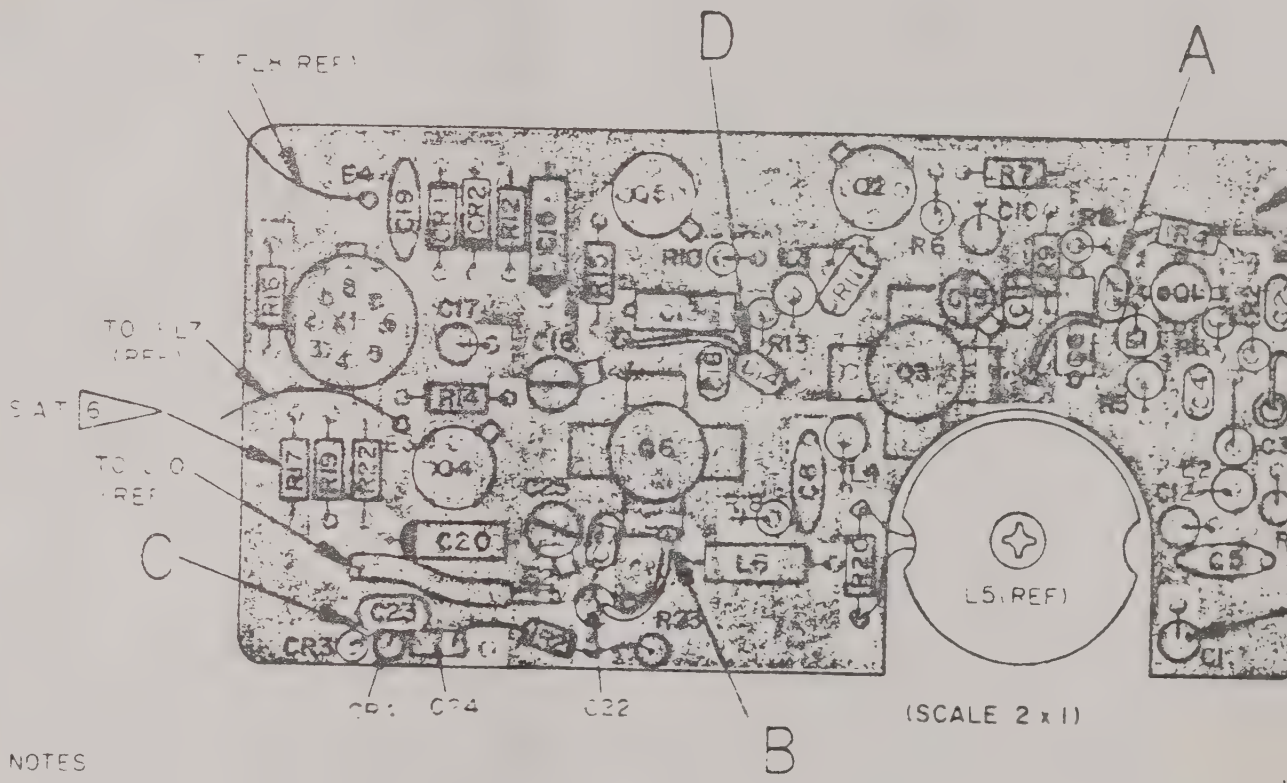

(SCALE 2 x 1)

NOTES

1. [illegible]

2. ALL TANT CAPS MOUNTED VERTICALLY ARE POSITIVE END UP

3. USE [illegible] SLEEVE # 050-0000-115) 06 LONG ON C7 LEAD TO ASSURE SAME LENGTH ON EVERY INSTALLATION.

4. USE [illegible] SLEEVE (#050-0000-[illegible]) [illegible] LONG FROM +C22 LEAD TO COLLECTO TO ASSURE SAME LEAD LENGTH ON EVERY INSTALLATION.

5. USE [illegible] SLEEVE # 050-0000-115) 40 LONG ON C14 LEAD TO ASSURE SAME LENGTH ON EVERY INSTALLATION

6. R17 SET AT TEST (SAT RANGE. NOMINAL ~~39K~~; RANGE: ~~39~~K OR 33K

7. ALL P.C BOARD COMPONENTS CARRY AN 80000 SERIES REFERENCE DESIGNATO (E.G. C5 IS C80005 AND R22 IS R80022)

DATE	REV	CHANGE	APP'D

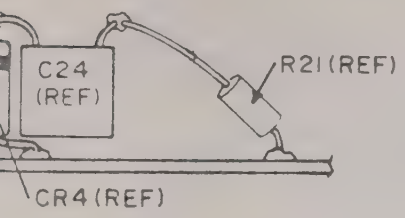

C (NOT TO SCALE)

-E1

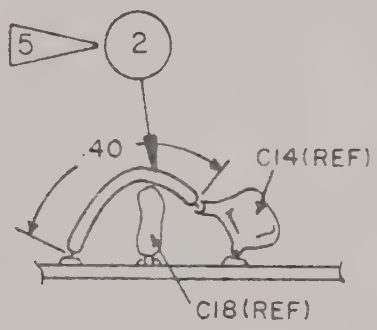

DETAIL D
(NOT TO SCALE)

EAD

2 OF Q6

EAD

ITEM	REQ'D	PART NO	DESCRIPTION

LIST OF MATERIALS

MODEL	QTY	NEXT ASSY	APPLICATION
1000S	1	23-725	

TOLERANCES
UNLESS OTHERWISE SPECIFIED
ALL DIMENSIONS APPLY AFTER FINISH
DECIMALS .XX ± .010 .XXX ± .005
ANGLES ± 1°
FRACTIONS ± 1/64
SURFACE ROUGHNESS 125
REMOVE ALL BURRS

DRAWN ER 4/25/80 DATE
CHECKED J. Adams 80 DATE 11-6-
APPROVED Frank A 11/6/80 DATE

MATERIAL —/—
FINISH —/—

-IFR INC-
WICHITA KANSAS

TITLE
HIGH LEVEL AMP P. C. BD #1 ASSY.
FM-AM 1000S

SIZE B
PART NUMBER 7010-2372-100
SCALE NOTED
WEIGHT —/—
SHEET 1 OF

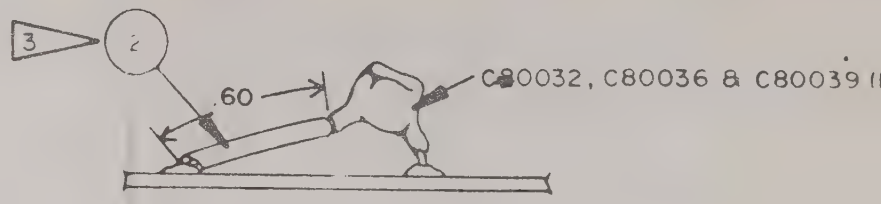

DETAIL A (NOT TO SCALE)

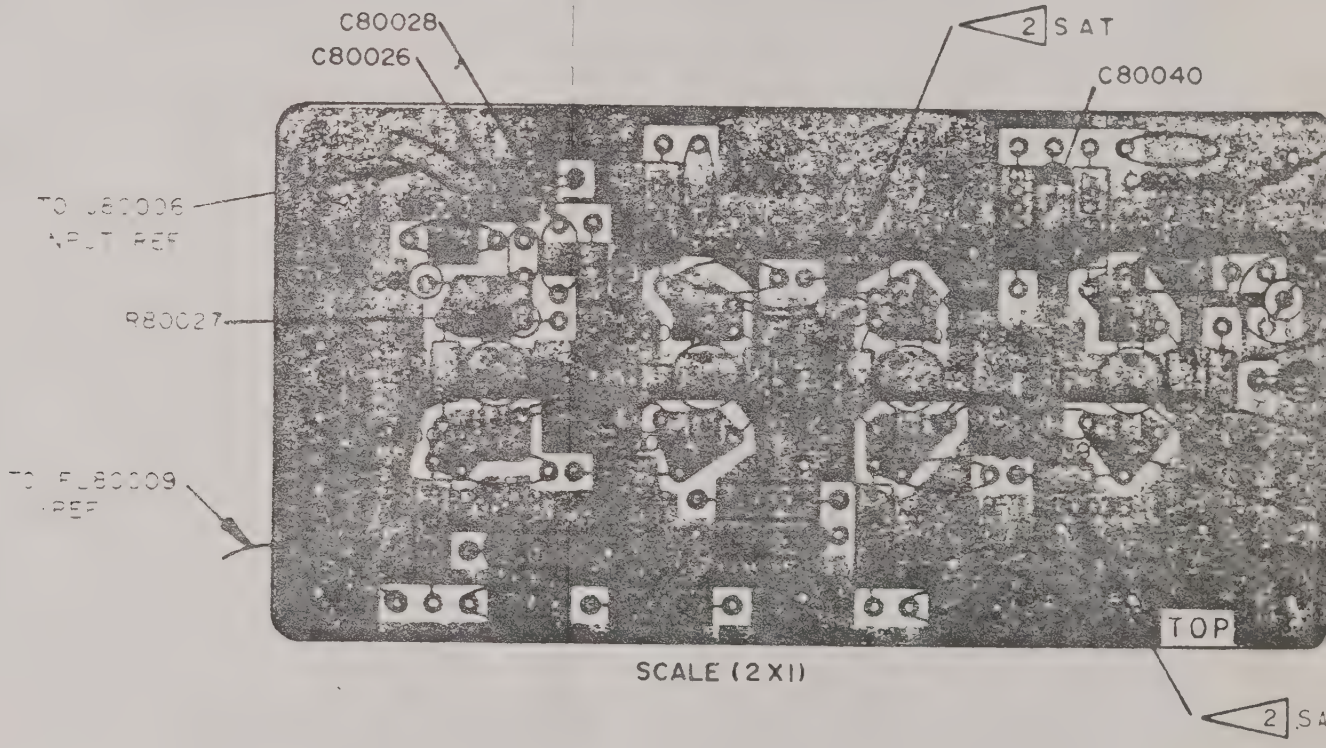

SCALE (2 X 1)

NOTES:

1. REFERENCE CIRCUIT SCHEMATIC 0000-2371-800.

2. R80032 AND R80035 ARE SET AT TEST (S.A.T) RESISTORS NOMINAL VALUE 3.9K
S.A.T. RANGE: 1.5K TO 3.9K, 1/8W, 10%.

3. USE 26AWG TEFLON SLEEVING (# 1050-0000-115) .60 LONG ON ONE LEAD OF
C80032, C80036 & C80039 TO ASSURE SAME LEAD LENGTH ON EVERY INSTALLA

DATE	REV	CHANGE	APP'D

F)

1

R80038

E80005

R80036

A TYP (3) PLCS

ION.

ITEM	REQ'D	PART NO	DESCRIPTION

LIST OF MATERIALS

MODEL	1000S
QTY	1
NEXT ASSY	23-725
APPLICATION	

TOLERANCES
UNLESS OTHERWISE SPECIFIED
ALL DIMENSIONS APPLY AFTER FINISH
DECIMALS .XX ± .010 .XXX ± .005
ANGLES ± 1/2°
FRACTIONS ± 1/64
SURFACE ROUGHNESS 125
REMOVE ALL BURRS

DRAWN ER 4/23/80 DATE
CHECKED J. Adams DATE 11-6-80
APPROVED BOROTA DATE

MATERIAL //
FINISH //

- IFR INC -
WICHITA, KANSAS

TITLE
HIGH LEVEL AMP P.C. BD. #2 ASSY.
FM-AM 1000S

SIZE B
PART NUMBER 7010-2372-400
REV
SCALE NONE
WEIGHT //
SHEET 1 OF 1

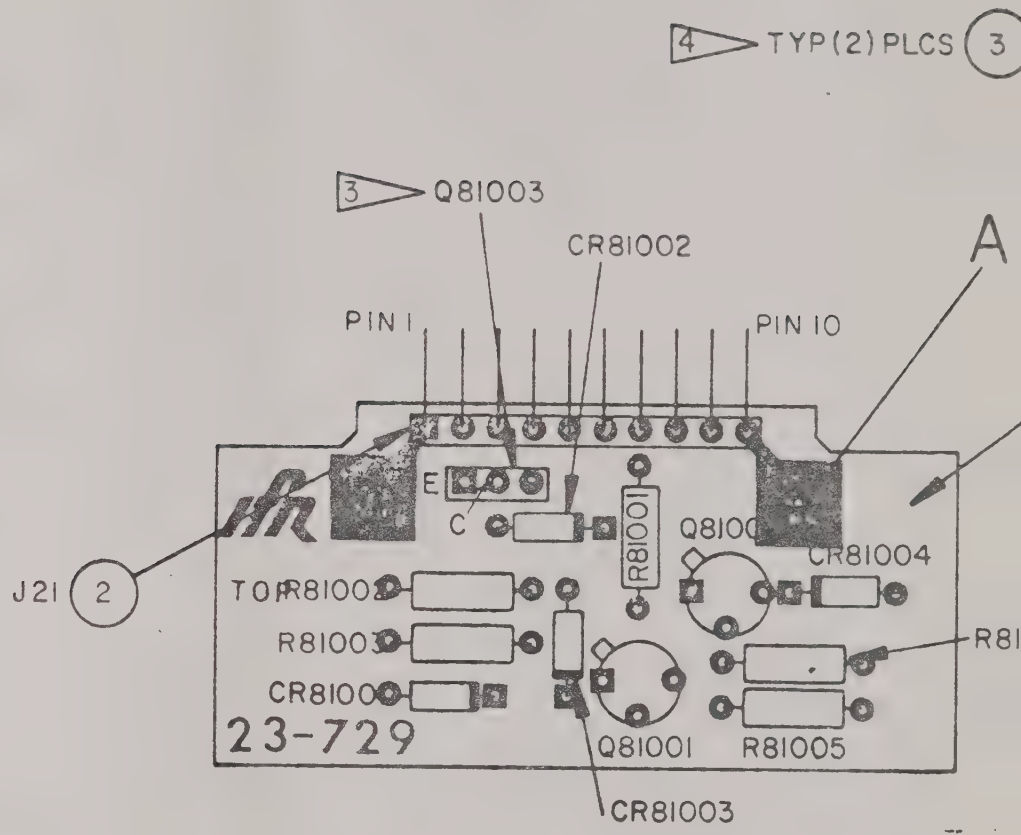

NOTES:

1. FOR CABLE INTERCONNECT SEE 0000-2364-001.
2. REFERENCE CIRCUIT SCHEMATIC 0000-2372-800.

3 INSTALL Q81003 TRANSISTOR WITH METAL BACK TOWARDS J21 CONNECT

4 SOLDER ITEM 3 (# 2800-0000-007) IN PLACE ON BOTTOM OF BOARD.

DATE	REV	CHANGE	APP'D

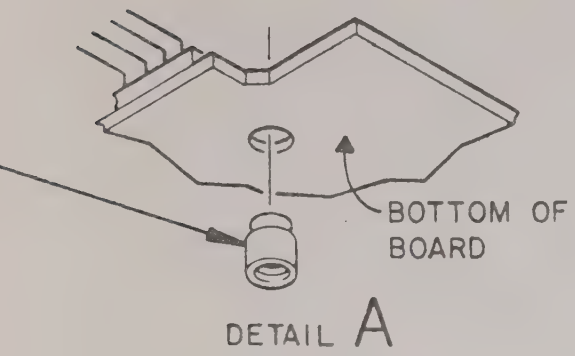

1

04

R.

ITEM	REQ'D	PART NO.	DESCRIPTION

LIST OF MATERIALS

23-641	1	1000S	
NEXT ASSY	QTY	MODEL	APPLICATION

TOLERANCES
UNLESS OTHERWISE SPECIFIED
ALL DIMENSIONS APPLY AFTER FINISH
DECIMALS .xx ± .010 .xxx ± .005
ANGLES ± 1/2°
FRACTIONS ± 1/64
SURFACE ROUGHNESS 125
REMOVE ALL BURRS

DRAWN ER 5/21/80
CHECKED J. Adams 11-6-80
APPROVED Borota 11/6/80

MATERIAL —//—
FINISH —//—

-IFR INC-
WICHITA, KANSAS

TITLE
RELAY DRIVER P.C. BD. ASSY.
FM-AM 1000 S

SIZE	PART NUMBER	REV
B	7010-2373-100	

SCALE	WEIGHT	SHEET	OF
2 x 1	—//—	1	1

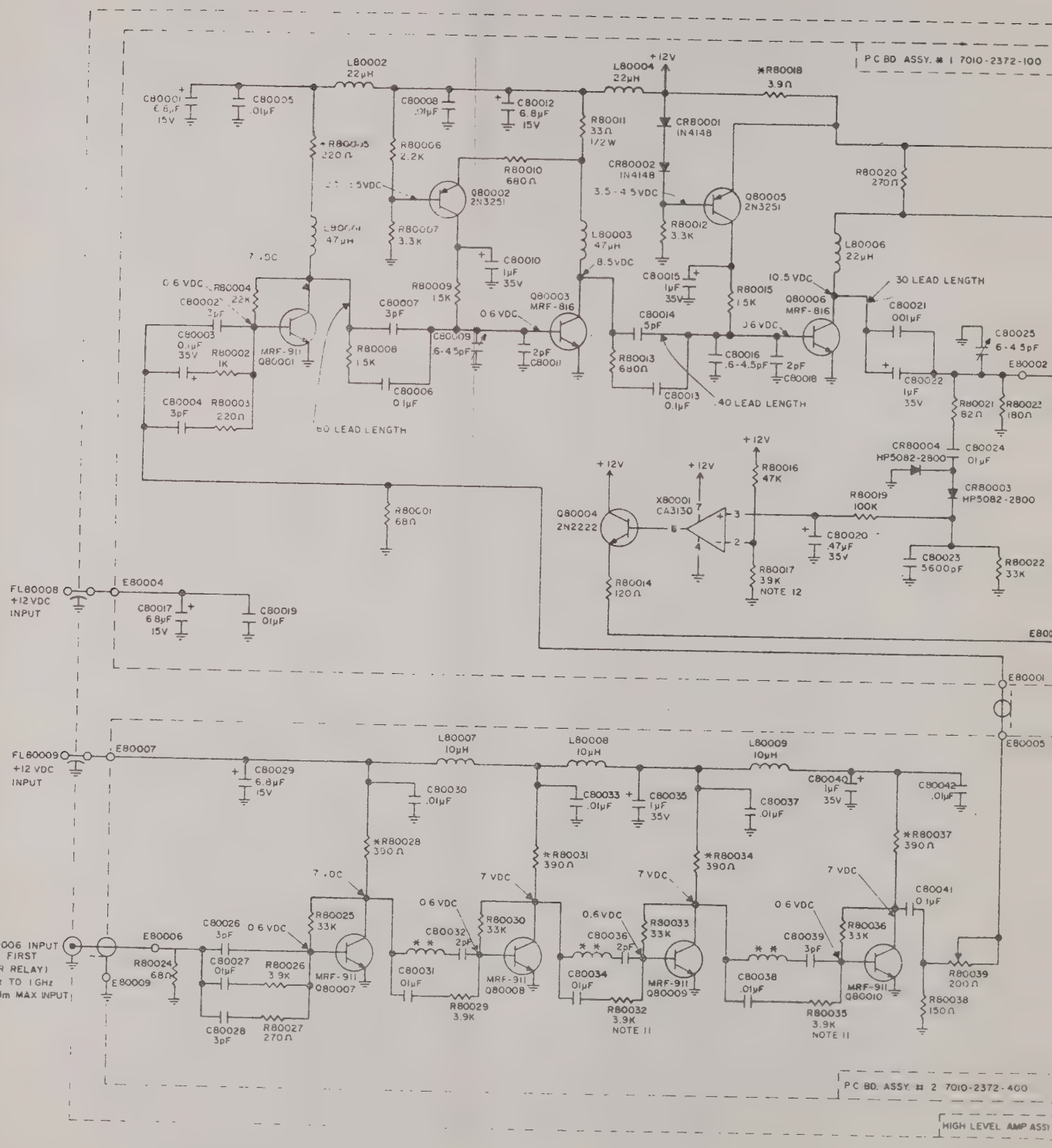
P C BD ASSY. # 1 7010-2372-100
L80002 22μH
C80001 6.8μF 15V
C80005 .01μF
C80008 .01μF
C80012 6.8μF 15V
L80004 22μH
+12V
*R80018 3.9Ω
R80011 33Ω 1/2W
CR80001 1N4148
CR80002 1N4148
R80020 270Ω
R80006 2.2K
R80010 680Ω
Q80002 2N3251
3.5-4.5VDC
Q80005 2N3251
R80012 3.3K
R80007 3.3K
L80003 47μH
8.5VDC
L80006 22μH
C80010 1μF 35V
C80015 1μF 35V
R80015 1.5K
10.5 VDC
30 LEAD LENGTH
0.6 VDC
R80004 22K
C80002 3pF
C80007 3pF
R80009 1.5K
Q80003 MRF-816
Q80006 MRF-816
C80014 .5pF
C80021 .001μF
C80025 6-4.5pF
E80002
C80003 0.1μF 35V
R80002 1K
MRF-911 Q80001
R80008 1.5K
C80009 6-4.5pF
2pF C80011
R80013 680Ω
C80016 6-4.5pF
2pF C80018
C80022 1μF 35V
R80021 82Ω
R80022 180Ω
C80004 3pF
R80003 220Ω
C80006 0.1μF
C80013 0.1μF
40 LEAD LENGTH
60 LEAD LENGTH
C80024 .01μF
CR80004 HP5082-2800
CR80003 HP5082-2800
R80016 47K
R80001 68Ω
Q80004 2N2222
X80001 CA3130
R80019 100K
C80020 .47μF 35V
C80023 5600pF
R80022 33K
R80014 120Ω
R80017 39K NOTE 12
FL80008 +12VDC INPUT
E80004
C80017 6.8μF 15V
C80019 .01μF
E80001
E80005
FL80009 +12 VDC INPUT
E80007
C80029 6.8μF 15V
L80007 10μH
L80008 10μH
L80009 10μH
C80030 .01μF
C80033 .01μF
C80035 1μF 35V
C80037 .01μF
C80040 1μF 35V
C80042 .01μF
*R80028 390Ω
*R80031 390Ω
*R80034 390Ω
*R80037 390Ω
7 VDC
C80041 .01μF
J80006 INPUT (FROM FIRST MIXER RELAY) (10KHz TO 1GHz -35dBm MAX INPUT)
E80006
E80009
R80024 68Ω
C80026 3pF
C80027 .01μF
R80026 3.9K
C80028 3pF
R80027 270Ω
R80025 33K
MRF-911 Q80007
0.6 VDC
C80031 .01μF
C80032 2pF
R80030 33K
MRF-911 Q80008
R80029 3.9K
C80034 .01μF
C80036 2pF
R80033 33K
MRF-911 Q80009
R80032 3.9K NOTE 11
C80038 .01μF
C80039 3pF
R80036 33K
MRF-911 Q80010
R80035 3.9K NOTE 11
R80039 200Ω
R80038 150Ω
P C BD. ASSY. # 2 7010-2372-400
HIGH LEVEL AMP ASSY

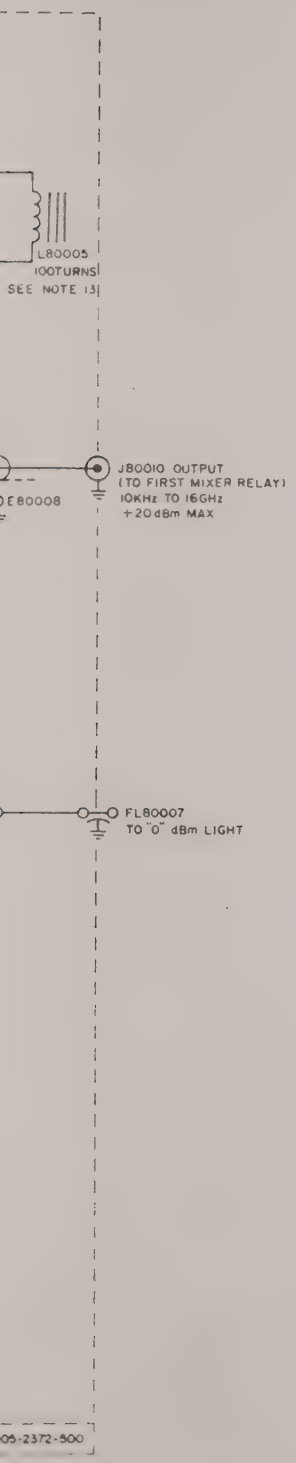

NOTES:

1. LAST REF. DES. USED:

C80042	L80009
CR80004	Q80010
E80009	R80039
FL80009	X80001
J80010	

2. REF. DES. NOT USED

FL80001	J80002
FL80002	J80003
FL80003	J80004
FL80004	J80005
FL80005	J80007
FL80006	J80008
J80001	J80009

3. ALL RESISTORS ARE 1/8W, 10% UNLESS OTHERWISE NOTED.
4. ALL RESISTORS MARKED WITH AN ASTERISK (*) ARE 1/4W, 10%.
5. ALL RESISTANCE IS EXPRESSED IN OHMS, UNLESS OTHERWISE NOTED.
6. ALL CAPACITANCE IS EXPRESSED IN MICRO-FARADS, UNLSS OTHERWISE NOTED.
7. ALL POLARIZED CAPACITORS ARE TANTALUM
8. ALL .01μF CAPACITORS ARE DISC
9. ALL CAPACITORS LESS THAN 01 ARE NPO
10. DOUBLE ASTERISK (* *) INDICATES THE STRAY INDUCTANCE FROM CAPACITOR LEAD 0.6" LONG. (TYP 3 PLCS) - C80032, C80036 & C80039
11. R80032 AND R80035 ON P.C BD. # 2 ARE SET AT TEST (S A T) RESISTORS
    NOMINAL VALUE INSTALLED IS 3.9K
    SELECT RANGE 1.5K TO 3.9K 1/8W, 10%
    4701-0152-003 - 1.5K
    4701-0182-003 - 1.8K
    4701-0222-003 - 2.2K
    4701-0272-003 - 2.7K
    4701-0332-003 - 3.3K
    4701-0392-003 - 3.9K
    R80032 AND R80035 ARE SELECTED TO FREQUENCY RESPONSE
12. R80017 ON P.C. BD. # 1 IS A SET AT TEST (S A T.) RESISTOR
    NOMINAL VALUE INSTALLED IS 39K, 1/8W, 10%
    SELECT RANGE 39K OR 33K, 1/8W, 10%.
    4701-0393-003 - 39K
    4701-0333-003 - 33K
    R80017 IS SELECTED FOR THE "0" dBM INDICATOR LIGHT ADJUSTMENT.
13. L8005 INDUCTANCE VALUE: 3.0 mH ±25% MEASURED AT 1KHz SERIES CIRCUIT/ OR EQUIVALENT

100015	100015		
23-721	23-724		

TOLERANCES

ER 5/29/80

J Adams

- HFR INC -

HIGH LEVEL AMP
CIRCUIT SCHEMATIC
FM-AM 10005

0 0000-2371-800

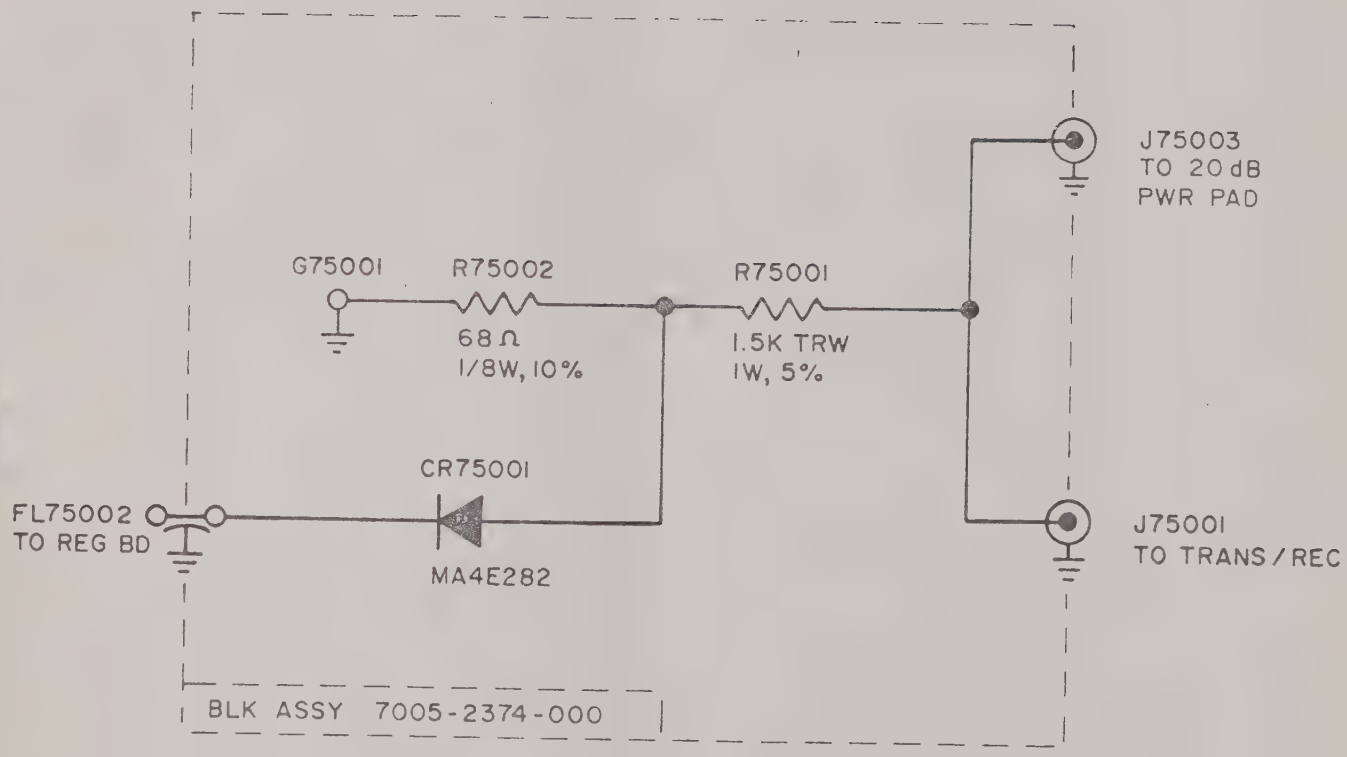
J75003
TO 20 dB
PWR PAD
G75001
R75002
68 Ω
1/8W, 10%
R75001
1.5K TRW
1W, 5%
CR75001
FL75002
TO REG BD
MA4E282
J75001
TO TRANS/REC
BLK ASSY 7005-2374-000

DATE	REV	CHANGE	APP'D
3 1181	A	INC. ECN 3636 RF	

NOTES:

1. LAST REF DES USED:

   CR75001
   FL75002
   G75001
   J75003
   R75002

2. REF DES NOT USED:

   FL75001
   J75002

ITEM	REQ'D	PART NO.	DESCRIPTION

LIST OF MATERIALS

23-740	1	10005
NEXT ASS'Y	QT'Y	MODEL

APPLICATION

TOLERANCES
UNLESS OTHERWISE SPECIFIED
ALL DIMENSIONS APPLY AFTER FINISH
DECIMALS: .xx = ± .010 .xxx = ± .005
ANGLES: ± 1/2°
FRACTIONS: ± 1/64
SURFACE ROUGHNESS 125 J
REMOVE ALL BURRS

DRAWN DATE: ER 4/3/80
CHECKED DATE: J. Adams 11-6-80
APPROVED DATE: Borcith 11/6/80

-IFR INC-
WICHITA, KANSAS

TITLE
XMTR SENSOR ASSY
CIRCUIT SCHEMATIC
FM-AM 1000 S

MATERIAL —— # ——
FINISH —— # ——

SIZE: B
PART NUMBER: 0000-2377-300
REV: --
SCALE: NONE
WEIGHT: —— # ——
SHEET 1 OF 1

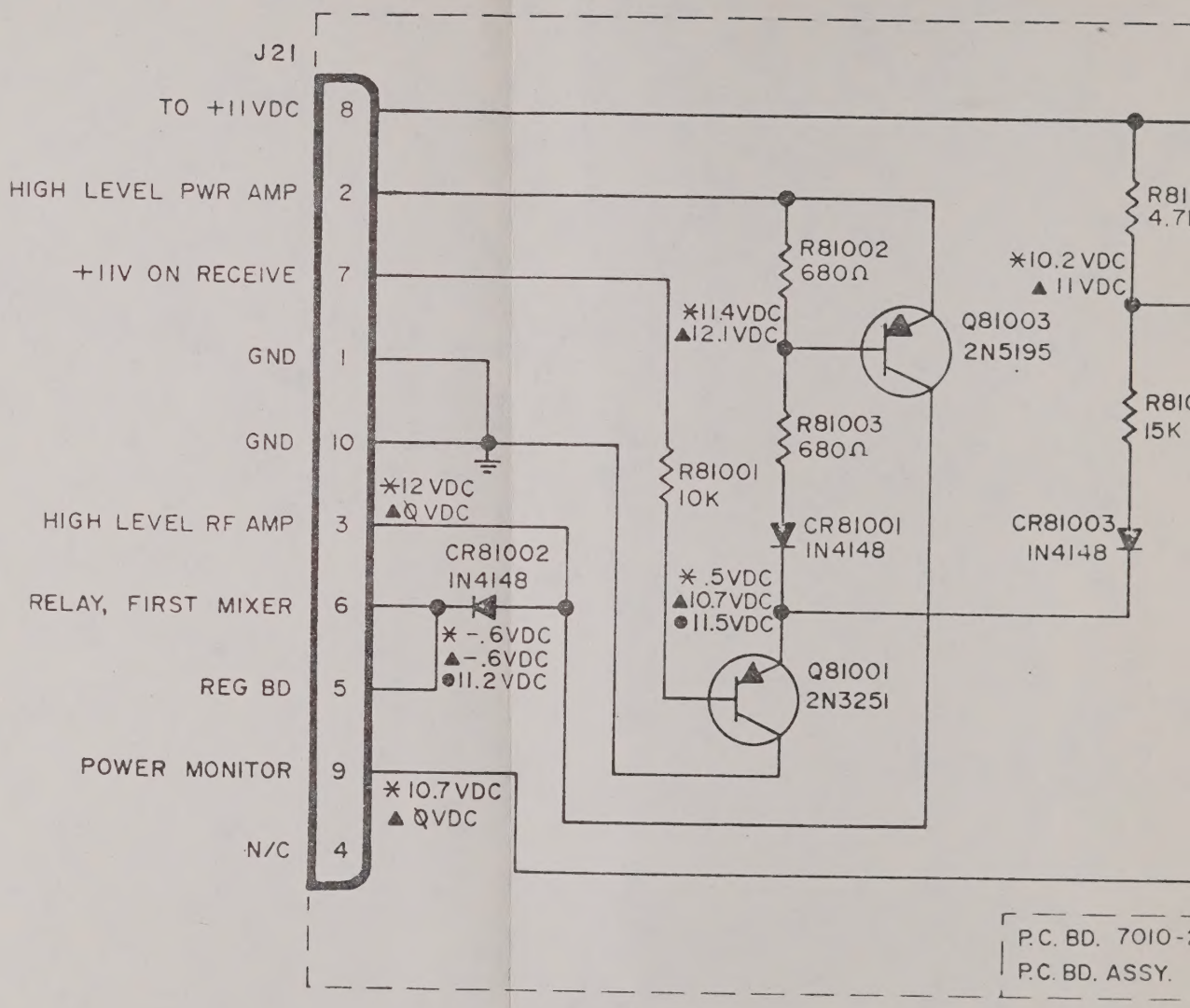

NOTES:

1. TEST VOLTAGE VALUE LEGEND:
   - * GEN VDC
   - ▲ REC VDC
   - ● HIGH LEVEL VDC
2. LAST REF. DES. USED:
   - CR81004
   - J21
   - Q81003
   - R81005

DATE	REV	CHANGE	APP'D

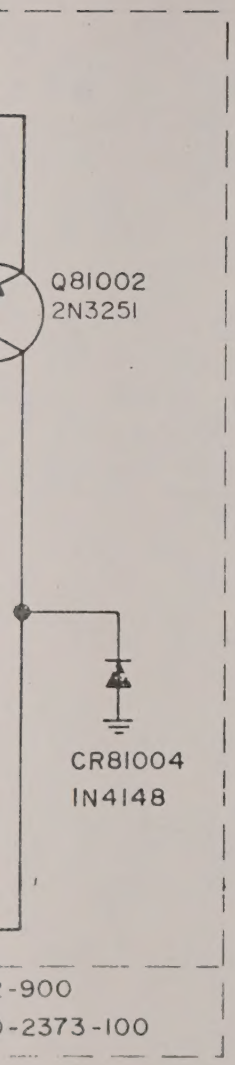

ITEM	REQ'D	PART NO.	DESCRIPTION

LIST OF MATERIALS

MODEL	1000S
QT'Y	1
NEXT ASS'Y	23-731
APPLICATION	

TOLERANCES
UNLESS OTHERWISE SPECIFIED
ALL DIMENSIONS APPLY AFTER FINISH
DECIMALS: .xx = ± .010 .xxx = ± .005
ANGLES: ± 1/2°
FRACTIONS: ± 1/64
SURFACE ROUGHNESS: 125
REMOVE ALL BURRS

	DATE
DRAWN	ER 5/20/80
CHECKED	J Adams 11-6-80
APPROVED	Bob A 11/6/80

-IFR INC-
WICHITA, KANSAS

TITLE
RELAY DRIVER
CIRCUIT SCHEMATIC
FM-AM 1000 S

MATERIAL —//—
FINISH —//—

SIZE	PART NUMBER	REV
B	0000-2372-800	
SCALE NONE	WEIGHT —//—	SHEET 1 OF 1